新しいフェーズに入った衛星測位技術を加速させる人材育成

ソフトウェアGNSS受信機の高精度測位演算及びポケットSDRに関する講義
Inside RTKLIB and Pocket SDR

高須　知二
Tomoji TAKASU

2024-02-26~27 @TUMSAT, Tokyo, Japan

2024-02-27 Rev.A

Inside RTKLIB

History of RTKLIB (1/2)

2000 ~ 2009: GpsTools (GT) [1]

GNSS precise analysis software based on MATLAB and C-MEX, PPP and POD of GNSS satellites

2006: rtkdemo.m [2]

A tiny RTK demo program written in MATLAB. AR by LAMBDA/MLAMBDA

2006: RTKLIB ver. 0.1 [2]

A simple RTK sample program used in the laboratory seminar for TUMSAT masters students.

2007/3: RTKLIB ver. 1.1

RNX2RTKP, POS2KML, RNX2RTKP_GUI. Only post-processing with GPS.

2008/7: RTKLIB ver. 2.1

RTKPOST, RTKPLOT, RTKCONV, CONVBIN. Receiver: OEMV, LEA-4T, SS2, Crescent, …

2009/1: RTKLIB ver. 2.2.0

Published as OSS [3]. License GPLv3. RTKNAVI, STRSVR, NTRIPBROWS.

2009/12 ~ 2011/6: RTKLIB ver. 2.2.1, 2.2.2, 2.3.0, 2.4.0, 2.4.1

RTCM 2/3 (2.2.1), GLONASS (2.3.0), Long-BL RTK, RTCM MSM/SSR (2.4.0), QZSS (2.4.1)

2013/4: RTKLIB ver. 2.4.2

Repository in GitHub [4]. License BSD 2-clause. Full multi-GNSS support (Galileo/BDS, RINEX 3, …)

2014/9 ~ 2020/12: RTKLIB ver. 2.4.3 beta

[1] https://gpspp.sakura.ne.jp/gpstools/gt_release.htm, [2] https://gpspp.sakura.ne.jp/theory.htm,
[3] https://www.rtklib.com, [4] https://github.com/tomojitakasu/RTKLIB

History of RTKLIB (2/2)

RTKLIB ver. 2.4.3 beta History

...

2018/10/10 **b30**
- support u-blox zed-f9p
- support api-key for gmview of rtkplot
- improve galileo sisa, i/nav and f/nav hadling
- fix many bugs

2018/11/05 **b31**
- update rtcm mt for beidou ephemeirs (1047->1042)
- fix bug on default stream playback speed (= 0)
- fix bug on stream file playback as slave mode
- fix bug on timeset() in gpst instead of utc
- fix problem on invalid time in message monitor for rtcm 3
- fix problem on number of cell-mask overflow for rtcm msm
- fix problem on missing QZSS L2C signal for u-blox rxm-rawx

2019/05/10 **b32**
- support beidou C36-37 (#145)
- fix bug on dropping message on tcp stream (#144)
- save galileo E5b data to obs index 2 in struct obs_t
- disable ambiguity resolution of gps-qzss for rel-positioning
- add test of i/nav word type 5 on reading galileo ephemeris
- support u-blox zed-f9p rxm-rawx, rxm-sfrbx

2019/08/19 **b33**
- support galileo sisa index for reading rinex nav data
- support binex upgraded galileo ephemeris (0x01-14)
- support 460800 and 921600 bps for serial stream
- fix bug on return value of resamb_LAMBDA() error

2020/12/29 **b34**
- support RINEX 3.04
- support SP3-d for precise ephemeris
- support BDS-3 C38-63
- support IRNSS (NavIC)
- support BINEX meta-data (0x00)
- fix bug on handling Galileo ephemeris ...

2024/12/31 **b35**
- support RINEX 3.05, 4.00 and 4.01, RINEX clock 3.04
- support SINEX_BIAS for DCB
- support RTCM 3.4
- support CSSR for MADOCA-PPP
- support Leaflet and Google Maps for RTKPLOT map view
- ...

https://github.com/tomojitakasu/RTKLIB/tree/rtklib_2.4.3

GitHub Stars

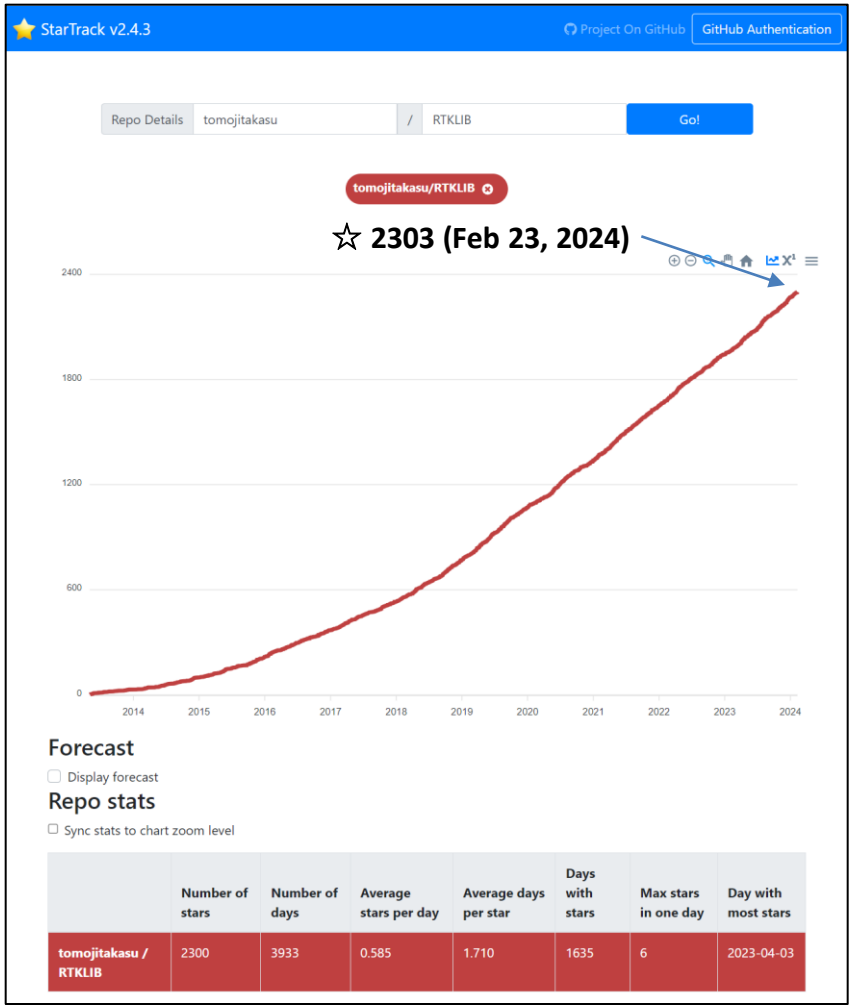

	Number of stars	Number of days	Average stars per day	Average days per star	Days with stars	Max stars in one day	Day with most stars
tomojitakasu / RTKLIB	2300	3933	0.585	1.710	1635	6	2023-04-03

https://seladb.github.io/StarTrack-js/#/

Source Line Count

RTKLIB ver. 0.2 (2006/12)

lambda.c	197
lambda.h	11
pntpos.c	68
pntpos.h	8
readrnx.c	194
readrnx.h	5
rnx2pntp.c	109
rnx2rtkp.c	152
rtkcmn.c	276
rtkcmn.h	120
rtkpos.c	202
rtkpos.h	6
Total	1348

1.3 kSLOC

(w/o comment and null lines)

RTKLIB ver. 2.4.3 b34 (2020/12)

src/rtklib.h	1551
src/convgpx.c	133
src/convkml.c	162
src/convrnx.c	1239
src/datum.c	95
src/download.c	739
src/ephemeris.c	585
src/geoid.c	7421
src/gis.c	336
src/ionex.c	390
src/lambda.c	186
src/options.c	436
src/pntpos.c	535
src/postpos.c	1113
src/ppp.c	975
src/ppp_ar.c	6
src/preceph.c	540
src/rcvraw.c	1175
src/rinex.c	2446
src/rtcm.c	195
src/rtcm2.c	395
src/rtcm3.c	2482
src/rtcm3e.c	2513
src/rtkcmn.c	2989
src/rtkpos.c	1487
src/rtksvr.c	915
src/sbas.c	746
src/solution.c	1476
src/stream.c	2698
src/streamsvr.c	611
src/tides.c	212
src/tle.c	470
src/rcv/binex.c	1139
src/rcv/crescent.c	552
src/rcv/javad.c	1686
src/rcv/novatel.c	1291
src/rcv/nvs.c	506
src/rcv/rt17.c	1727
src/rcv/septentrio.c	807
src/rcv/skytraq.c	699
src/rcv/ss2.c	264
src/rcv/ublox.c	1137
src total	47060
app/consapp/convbin/convbin.c	552
app/consapp/pos2kml/pos2kml.c	91
app/consapp/rnx2rtkp/rnx2rtkp.c	164
app/consapp/rtkrcv/rtkrcv.c	1475
app/consapp/rtkrcv/vt.c	323
app/consapp/rtkrcv/vt.h	32
app/consapp/str2str/str2str.c	300
app/consapp total	2937

app/winapp/appcmn/aboutdlg.h	35
app/winapp/appcmn/cmdoptdlg.h	37
app/winapp/appcmn/confdlg.h	19
app/winapp/appcmn/console.h	39
app/winapp/appcmn/fileoptdlg.h	45
app/winapp/appcmn/freqdlg.h	73
app/winapp/appcmn/ftpoptdlg.h	45
app/winapp/appcmn/glofcndlg.h	120
app/winapp/appcmn/gmview.h	39
app/winapp/appcmn/graph.h	84
app/winapp/appcmn/keydlg.h	57
app/winapp/appcmn/maskoptdlg.h	68
app/winapp/appcmn/mntpoptdlg.h	55
app/winapp/appcmn/refdlg.h	45
app/winapp/appcmn/serioptdlg.h	38
app/winapp/appcmn/tcpoptdlg.h	40
app/winapp/appcmn/timedlg.h	20
app/winapp/appcmn/tspandlg.h	57
app/winapp/appcmn/viewer.h	46
app/winapp/appcmn/vieweropt.h	35
app/winapp/rtkconv/codeopt.h	138
app/winapp/rtkconv/convmain.h	209
app/winapp/rtkconv/convopt.h	99
app/winapp/rtkconv/startdlg.h	36
app/winapp/rtkget/getmain.h	189
app/winapp/rtkget/getoptdlg.h	43
app/winapp/rtkget/staoptdlg.h	29
app/winapp/rtklaunch/launchmain.h	74
app/winapp/rtklaunch/launchoptdlg.h	23
app/winapp/rtknavi/instrdlg.h	103
app/winapp/rtknavi/logstrdlg.h	68
app/winapp/rtknavi/mapdlg.h	75
app/winapp/rtknavi/markdlg.h	47
app/winapp/rtknavi/mondlg.h	96
app/winapp/rtknavi/navimain.h	277
app/winapp/rtknavi/naviopt.h	296
app/winapp/rtknavi/outstrdlg.h	61
app/winapp/rtknavi/rcvoptdlg.h	21
app/winapp/rtkplot/conndlg.h	63
app/winapp/rtkplot/fileseldlg.h	44
app/winapp/rtkplot/mapoptdlg.h	62
app/winapp/rtkplot/mapview.h	67
app/winapp/rtkplot/mapviewopt.h	41
app/winapp/rtkplot/plotmain.h	648
app/winapp/rtkplot/plotopt.h	162
app/winapp/rtkplot/pntdlg.h	42
app/winapp/rtkplot/skydlg.h	114
app/winapp/rtkplot/vmapdlg.h	101
app/winapp/rtkpost/kmzconv.h	89
app/winapp/rtkpost/postmain.h	222
app/winapp/rtkpost/postopt.h	294
app/winapp/srctblbrows/browsmain.h	107
app/winapp/srctblbrows/staoptdlg.h	29
app/winapp/strsvr/convdlg.h	35
app/winapp/strsvr/mondlg.h	44
app/winapp/strsvr/svrmain.h	193
app/winapp/strsvr/svroptdlg.h	75
app/winapp/appcmn/aboutdlg.cpp	24
app/winapp/appcmn/cmdoptdlg.cpp	81
app/winapp/appcmn/confdlg.cpp	10
app/winapp/appcmn/console.cpp	114
app/winapp/appcmn/fileoptdlg.cpp	124
app/winapp/appcmn/freqdlg.cpp	10

app/winapp/appcmn/ftpoptdlg.cpp	97
app/winapp/appcmn/glofcndlg.cpp	87
app/winapp/appcmn/gmview.cpp	130
app/winapp/appcmn/graph.cpp	696
app/winapp/appcmn/keydlg.cpp	36
app/winapp/appcmn/maskoptdlg.cpp	58
app/winapp/appcmn/mntpoptdlg.cpp	46
app/winapp/appcmn/refdlg.cpp	246
app/winapp/appcmn/serioptdlg.cpp	82
app/winapp/appcmn/tcpoptdlg.cpp	163
app/winapp/appcmn/timedlg.cpp	31
app/winapp/appcmn/tspandlg.cpp	194
app/winapp/appcmn/viewer.cpp	123
app/winapp/appcmn/vieweropt.cpp	45
app/winapp/rtkconv/codeopt.cpp	468
app/winapp/rtkconv/convmain.cpp	1133
app/winapp/rtkconv/convopt.cpp	205
app/winapp/rtkconv/rtkconv.cpp	51
app/winapp/rtkconv/startdlg.cpp	101
app/winapp/rtkget/getmain.cpp	890
app/winapp/rtkget/getoptdlg.cpp	49
app/winapp/rtkget/rtkget.cpp	42
app/winapp/rtkget/staoptdlg.cpp	56
app/winapp/rtklaunch/launchmain.cpp	236
app/winapp/rtklaunch/launchoptdlg.cpp	37
app/winapp/rtklaunch/rtklaunch.cpp	33
app/winapp/rtknavi/instrdlg.cpp	362
app/winapp/rtknavi/logstrdlg.cpp	184
app/winapp/rtknavi/mapdlg.cpp	443
app/winapp/rtknavi/markdlg.cpp	124
app/winapp/rtknavi/mondlg.cpp	1976
app/winapp/rtknavi/navimain.cpp	2769
app/winapp/rtknavi/naviopt.cpp	1141
app/winapp/rtknavi/outstrdlg.cpp	152
app/winapp/rtknavi/rcvoptdlg.cpp	18
app/winapp/rtknavi/rtknavi.cpp	72
app/winapp/rtkplot/conndlg.cpp	174
app/winapp/rtkplot/fileseldlg.cpp	64
app/winapp/rtkplot/mapoptdlg.cpp	165
app/winapp/rtkplot/mapview.cpp	327
app/winapp/rtkplot/mapviewopt.cpp	55
app/winapp/rtkplot/plotcmn.cpp	545
app/winapp/rtkplot/plotdata.cpp	1417
app/winapp/rtkplot/plotdraw.cpp	2243
app/winapp/rtkplot/plotinfo.cpp	405
app/winapp/rtkplot/plotmain.cpp	2790
app/winapp/rtkplot/plotopt.cpp	312
app/winapp/rtkplot/pntdlg.cpp	115
app/winapp/rtkplot/rtkplot.cpp	77
app/winapp/rtkplot/skydlg.cpp	288
app/winapp/rtkplot/vmapdlg.cpp	196
app/winapp/rtkpost/kmzconv.cpp	267
app/winapp/rtkpost/postmain.cpp	1502
app/winapp/rtkpost/postopt.cpp	1001
app/winapp/rtkpost/rtkpost.cpp	52
app/winapp/srctblbrows/browsmain.cpp	513
app/winapp/srctblbrows/srctblbrows.cpp	35
app/winapp/srctblbrows/staoptdlg.cpp	57
app/winapp/strsvr/convdlg.cpp	51
app/winapp/strsvr/mondlg.cpp	176
app/winapp/strsvr/strsvr.cpp	58
app/winapp/strsvr/svrmain.cpp	803
app/winapp/strsvr/svroptdlg.cpp	148
app/winapp total	32088

47.1 (src) + 2.9 (consapp) + 32.1 (winapp) = 82.1 kSLOC

Researchs

Google Scholar

Google Scholar

Takasu Tomoji
Tokyo University of Marine Science and Technology
確認したメール アドレス: yk.rim.or.jp
Satellite Navigation Precise Positioning GPS

フォロー

引用先	すべて	2019 年以降
引用	2404	1250
h 指標	15	13
i10 指標	19	13

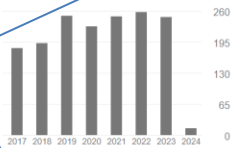

タイトル	引用先	年
Development of the low-cost RTK-GPS receiver with an open source program package RTKLIB T Takasu, A Yasuda International symposium on GPS/GNSS 1, 1-6	764	2009
Quasi real-time fault model estimation for near-field tsunami forecasting based on RTK-GPS analysis: Application to the 2011 Tohoku-Oki earthquake (M_w 9.0) Y Ohta, T Kobayashi, H Tsushima, S Miura, R Hino, T Takasu, H Fujimoto, ... Journal of Geophysical Research: Solid Earth 117 (B2)	257	2012
RTKLIB: An open source program package for GNSS positioning T Takasu	206	2011
RTKLIB ver. 2.4. 2 Manual T Takasu RTKLIB: An Open Source Program Package for GNSS Positioning 29, 49	204	2013
Kalman-filter-based integer ambiguity resolution strategy for long-baseline RTK with ionosphere and troposphere estimation T Takasu, A Yasuda Proceedings of the 23rd international technical meeting of the satellite ...	174	2010
RTKLIB: Open source program package for RTK-GPS T Takasu Proceedings of the FOSS4G	153	2009
Evaluation of RTK-GPS performance with low-cost single-frequency GPS receivers T Takasu, A Yasuda Proceedings of international symposium on GPS/GNSS, 852-861	145	2008
Ray-traced troposphere slant delays for precise point positioning T Hobiger, R Ichikawa, T Takasu, Y Koyama, T Kondo Earth, planets and space 60, e1-e4	89	2008
Evaluation and calibration of receiver inter-channel biases for RTK-GPS/GLONASS H Yamada, T Takasu, N Kubo, A Yasuda Proceedings of the 23rd international technical meeting of the Satellite ...	77	2010
Development, evaluation and application of RTKLIB: A program library for RTK-GPS T Takasu, N Kubo, A Yasuda GPS/GNSS symposium, 213-218	68	2007
Cycle slip detection and fixing by MEMS-IMU/GPS integration for mobile environment RTK-GPS T Takasu, A Yasuda Proceedings of the 21st international technical meeting of the satellite ...	55	2008
Evaluation of precise point positioning using MADOCA-LEX via Quasi-Zenith satellite system T Suzuki, N Kubo, T Takasu Proceedings of the 2014 International Technical Meeting of the Institute of ...	32	2014
Real-time PPP with RTKLIB and IGS real-time satellite orbit and clock T Takasu IGS Workshop 2010, Newcastle upon Tyne, England, June 28-July 2	27	2010
Rtklib T Takasu Available: http://www.rtklib.com	24	2013

https://scholar.google.co.jp/citations?user=9XWl41wAAAAJ

T. Takasu, Development of the low-cost RTK-GPS receiver with an open source program package RTKLIB, ISGNSS 2009

3. Low-Cost RTK-GPS Receiver with RTKLIB

3.1 Selection of GPS Receiver Board/Module

Table 1 shows the GPS receiver boards or modules supporting raw measurement and satellite ephemeris output with less than $300 as the sample price. All of the receivers in the table are only for single-frequency signals. Currently there is no dual or triple frequency receiver available in reasonable price range. Out of these receivers listed in Table 1, we select LEA-4T provided u-blox AG [12]. The reasons why we select the receiver are:

- Good performance was obtained by the previous test [4].
- It is a small and compact module with low-power consumption.
- It provides "half-cycle ambiguity resolved" carrier-phase.
- It supports frequent update rate of raw data up to 10 Hz.

LEA-4T can be configured to output raw measurement data as RXM-RAW messages and navigation data frame buffers as RXM-SFRMB according to the UBX binary protocol [13]. LEA-4T also supports an asynchronous serial port and a USB interface to communicate with the host CPU.

Table 1. GPS Receiver Boards/Modules Supporting Raw Measurement and Satellite Ephemeris Output

Vender	Receiver Board/Module	B/M *1	# of CH	Max Raw Rate	Sample Price
NovAtel	SuperStarII	B	12ch	1Hz	$165
NovAtel	OEMStar*2	B	14ch	10Hz	?*4
Magellan	AC12	M	12ch	1Hz	$106
SiRF	SiRFstarII	C	12ch	1Hz	$57*5
GARMIN	GPS 15L/15H	M	12ch	1Hz	$60
u-blox	LEA-4T	M	16ch	10Hz	$179
u-blox	LEA-5T*3	M	50ch	2Hz	$179
u-blox	LEA-6T	M	50ch	?	?*6
Hemisphere	Crescent	B	12ch	10Hz	$285
SkyTraq	S1315F	M	12ch	20Hz	$25

*1 B: OEM Board, M: Module, C: Chip, *2 supports GLONASS, *3 F/W 6.00, *4 2009/4Q, *5 Module, *6 2010/1Q

3.2 Hardware Configuration

Figure 1 shows the hardware configuration of the developed low-cost RTK-GPS receiver. To construct the receiver, we port RTKLIB to a very compact and small single-board computer BeagleBoard [14]. Table 2 shows the features of BeagleBoard. BeagleBoard has 600MHz ARM Cortex-A8 core CPU and supports embedded Linux. For the receiver, we develop a additional small receiver board. On the receiver board, a LEA-4T modules is mounted, which connects to the a UART port of the expansion connecter of BeagleBoard via a voltage level converter. On the receiver board, an optional 6-axis ADI 165xx MEMS IMU also can be mounted by using SPI port of the extension connector of BeagleBoard. The receiver module LEA-4T has a SMA connector for an external GPS antenna. On BeagleBoard, user can connect some peripherals like WiFi LAN card and HSDPA (high speed downlink packet access) modem via two USB ports to communicate with external receivers or the base stations. BeagleBoard also supports SD card to save operational log or raw data as the RTK-GPS receiver. Table 2 shows a picture of the developed RTK-GPS receiver.

Table 2. Features of BeagleBoard (Rev C)

Item	Feature
Processor	TI OMAP3530 - ARM Cortex-A8 core CPU 600Hz - TMS320C64x+ DSP 430MHz
Memory	256MB SDRAM+256MB NAND Flash
Ext. Memory	MMC+/SD/SDIO
Serial I/F	RS-232C
USB I/F	USB 2.0 EHCI HS +USB 2.0 HS OTG
Peripherals	DVI-D, S-Video, Audio I/O, LCD I/F (Rev C)
Expansion	28P Header Pin (I2C, I2S, SPI, MMC/SD, UART
Power Supply	5V, about 350mA
Board Size	3" × 3" (76.2 × 76.2 mm)
Price	$149 (Digi-Key)

Figure 2. Picture of the developed Low-Cost RTK-GPS Receiver. Upper left shows the receiver board, lower left is BeagleBoard (Rev C), and right is the case, cables, connector and optional MEMS IMU device.

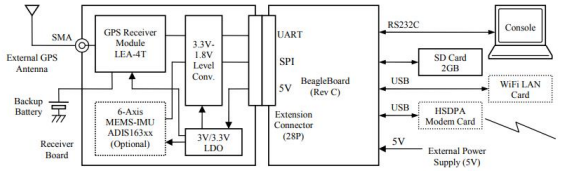

Figure 1. Hardware Configuration of Low-Cost RTK Receiver with RTKLIB

https://gpspp.sakura.ne.jp/paper2005/isgps_2009_rklib.pdf

REGARD

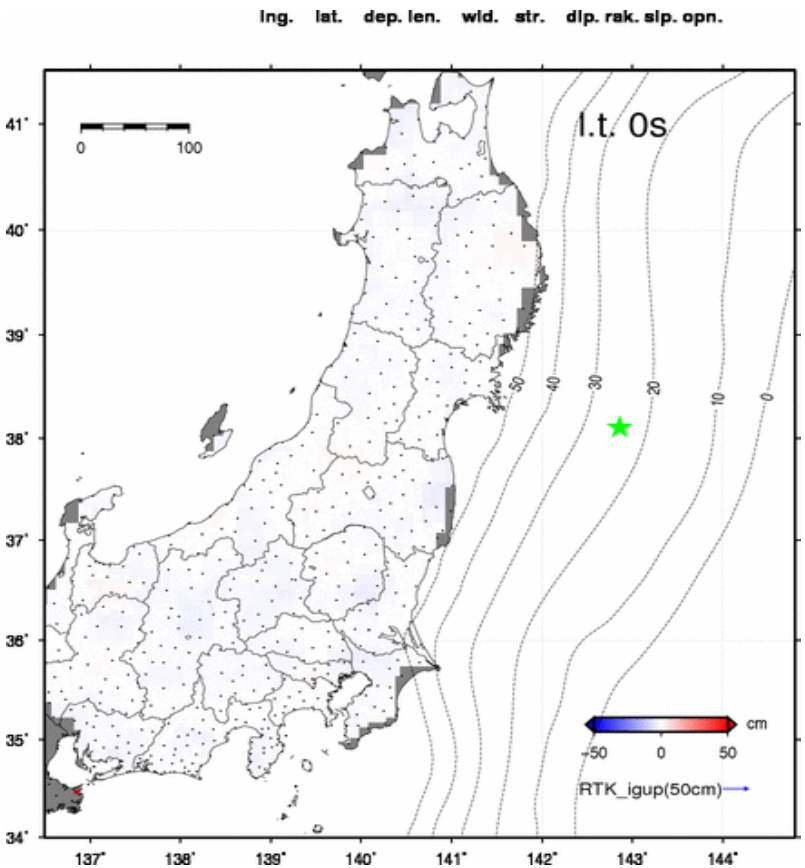

T.Kobayashi, Y.Ohta and S.Miura, Preliminary results of rapid determination of coseismic fault model using RTK-GPS, JPGU, 2011

https://www.gsi.go.jp/common/000137236.pdf

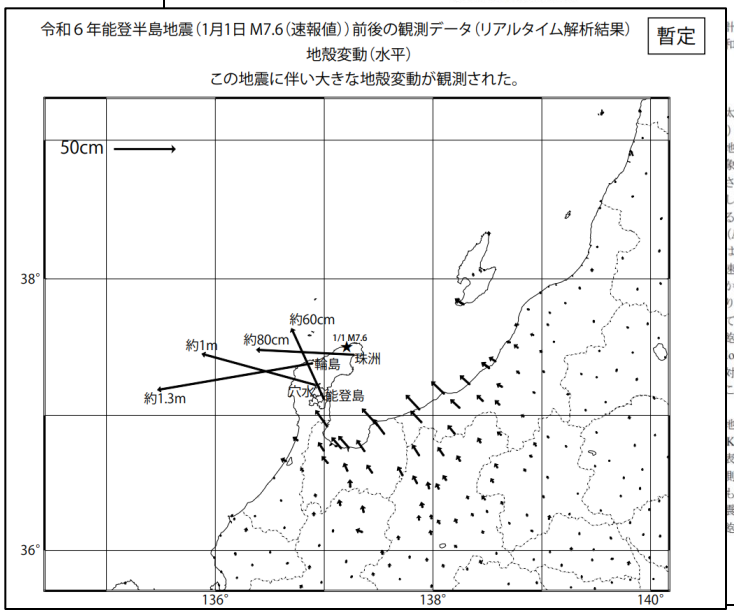

https://www.gsi.go.jp/BOUSAI/20240101_noto_earthquake.html#10

Long Baseline RTK

AR Strategy for Long-Baseline RTK

- No Linear Combination (LC)
  - Use all original phase and code observables
  - Not generate WL or NL LC
  - Estimate ionosphere terms explicitly
  - Suppress carrier-phase noises
- Directly Resolve L1 and L2 Ambiguities (N_1, N_2)
  - Search integer vector under ILS condition
  - Efficient process by LAMBDA/MLAMBDA with shrinking space by linear transformation

Feedback Fixed Ambiguity to Filter

Open Loop AR

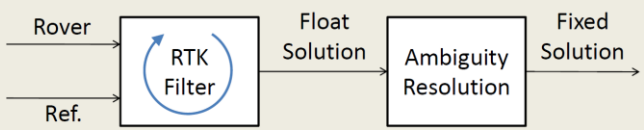

Fix and Hold Mode

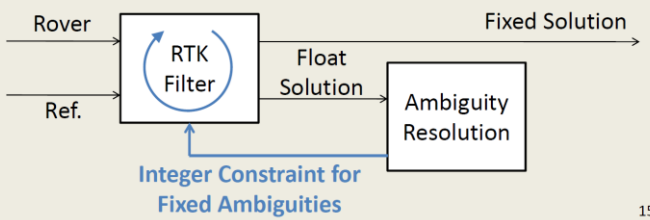

15

Results by Simple Implementation

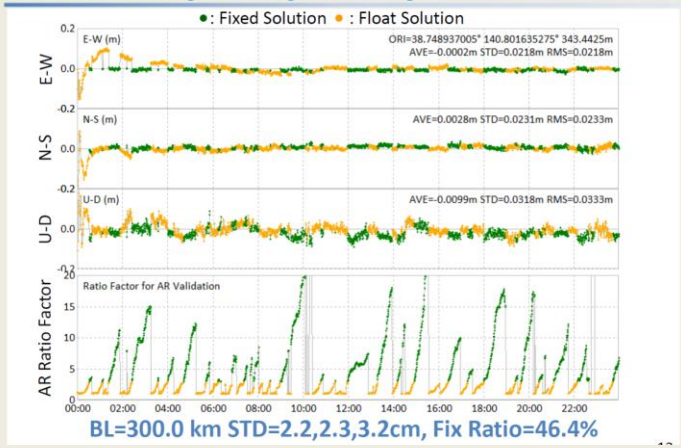

BL=300.0 km STD=2.2,2.3,3.2cm, Fix Ratio=46.4%

Performance Improvement

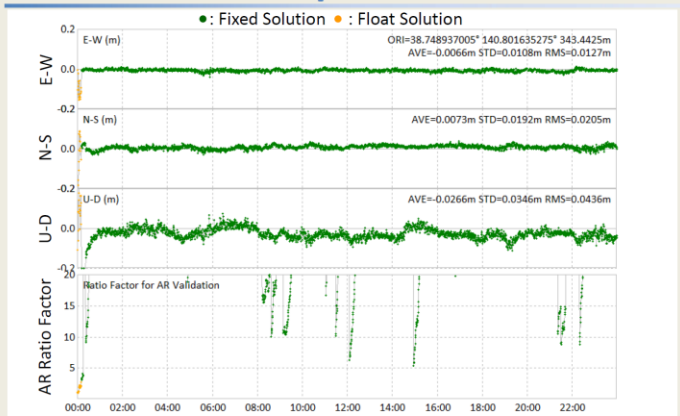

BL=300.0 km STD=1.1,1.9,3.5cm, Fix Ratio=99.3%

16

T. Takasu and A. Yasuda, Kalman-filter-based integer ambiguity resolution strategy for long-baseline RTK with ionosphere and troposphere estimation, ION GNSS 2010, September 21-24, Oregon Convention Center, Portland, U.S. (https://gpspp.sakura.ne.jp/paper2005/ion_2010_ttakasu.pdf)

GSILIB, CLASLIB, MADOCALIB

マルチGNSS解析ソフトウェア「GSILIB」の公開

最終更新日：2022年3月24日

1．公開の位置付け

国土地理院では、平成23年度から4年間、国土交通省総合技術開発プロジェクト「高度な国土管理のための複数の衛星測位システム（マルチGNSS）による高精度測位技術の開発」において、GPS、準天頂衛星、GLONASS、Galileoといった衛星測位システム（マルチGNSS）を利用して短時間に高精度の位置情報を取得し、公共測量等に適用するための技術開発を行いました。その後、技術開発の成果を一部活用し、平成27年度から3年間、国土交通省総合技術開発プロジェクト「3次元地理空間情報を活用した安全・安心・快適な社会実現のための技術開発」の一環として「屋外3次元空間における高精度衛星測位の適用範囲拡大のための技術開発」を行いました。本サイトでは、上記2つのプロジェクトにおいて開発・改良したマルチGNSS解析ソフトウェア「GSILIB」の一部を公開します。

2．「GSILIB」の概要

- 名称は、「GSILIB」です。GSILIBは、GNSS Survey Implementation Libraryを略したものです。
- 「GSILIB」は、GPS、準天頂衛星、GLONASS、GalileoのL1、L2、L5帯のデータを処理して、基線解析を行うことができます。
- 「GSILIB」は、東京海洋大学の高須知二氏が開発したオープンソースのGNSS解析ソフトウェアRTKLIB ver.2.4.2（http://www.rtklib.com）及びANTTOOL ver2.1（http://gnsspo.sakura.ne.jp/anteva/anttool.htm）をベースに、国土地理院のこれまでの技術開発の成果を組み込んだものです。
- Windows10日本語版で動作します。
- ソースコードはC言語で書かれています。
- 今回公開するのは、一定の検証が終了した部分のみとなります。検証が終了次第、他の部分についても公開を進めます。

3．「GSILIB」の機能

- RTKLIB ver.2.4.2に次の機能を主に追加しました。詳細は各プロジェクトHPの報告書等をご覧ください。
  - a. 異機種受信機間のGLONASSを含む基線解析に必要なGLONASSチャンネル間バイアス（IFB）の推定及び補正が可能
  - b. 異なる衛星系間における異機種受信機間の基線解析に必要なバイアス（ISB）の推定及び補正が可能
  - c. L2P(Y)とL2C間で発生する1/4サイクルシフトについて、受信機種毎に補正が可能
  - d. 上空写真から作成した仰角マスクファイルを用いてRINEXを編集することにより、マルチパスの影響を軽減することが可能

高度な国土管理のための複数の衛星測位システム（マルチGNSS）による高精度測位技術の開発　プロジェクトHP
高精度衛星測位の適用範囲拡大のための技術（マルチパスの影響を軽減する手法）の適用指針・検証、及び開発プログラム　HP

4．「GSILIB」　プログラム一覧

- 「GSILIB」のプログラム一覧は以下のとおりです。「GSILIB」の利用上の注意をご一読いただき、趣旨をご理解いただいた上でダウンロードページにお進みください。

1. GSILIB（gsipost_gui、gsiplot）
2. GSILIB（ANTApp）
3. GSILIB（photomask）

5．「GSILIB」の利用上の注意

- 「GSILIB」は、一部ツールであるANTAppを除き、BSD 2-clauseライセンスとなり、ANTAppはGPL v3ライセンスとなります。
- BSD 2-clauseライセンス、GPL v3ライセンスを守れば、「GSILIB」は自由に利用できます。また、ソースコードの複製・改変も可能ですが、ANTAppを複製・改変したものはGPL v3ライセンスを継承する必要があります。
- 公開にあたり一定の検証は行っていますが、予期せぬバグが含まれる可能性もあります。BSD 2-clauseライセンス、GPL v3ライセンスでは、このフリーソフトウェアには何らの保証もなされないことを明確にしていますので、ご注意ください。
- GPL v3についての解説は独立行政法人情報処理推進機構のHP等にあります（https://www.ipa.go.jp/osp/license1.html）。

| 趣旨を理解し、ダウンロードのページへ進む | 戻る |

https://terras.gsi.go.jp/geo_info/gsilib/gsilib.html

CLASテストライブラリ

2017年09月28日

いいね！0　ポスト

2017年12月19日改訂B
2018年4月12日改訂C
2018年8月31日改訂D
2019年2月28日改訂E
2019年9月5日改訂F
2019年12月25日改訂G
2020年2月13日改訂H
2020年11月17日改訂I
2022年8月25日改訂J
--

CLASテストライブラリ（CLASLIB）は、センチメートル級測位補強サービス（CLAS）に対応した製品を検討されている方向けに、参照実装として提供するものであり、データ変換処理ツールや、PPP-RTK測位計算プログラムなどを含みます。どちらも後処理専用ツールとなっており、実装アルゴリズム検討時に参照データ生成ツールとしてご利用いただけます。

本ツールは、GNSS精密測位用プログラムとして広く利用されている

- RTKLIB：An Open Source Program Package for GNSS Positioning
- GSILIB：GNSS Survey Implementation Library

を拡張して構成されています。本ツールには、以下の機能およびサンプルデータが含まれており、ユーザ側でCLASをサポートする測位ソフトウェアを開発する際の参考とすることで、効率的に開発を進めることができます。なお、ダウンロードによる配布は下記の（1）および（2）のみとなっております。

（1）本ライブラリのマニュアル
（2）状態空間表現（SSR）から観測空間表現（OSR）への変換ツール
（3）PPP-RTK（精密単独キネマティック測位）対応の後処理測位解析ツール

上記（3）のPPP-RTK対応の後処理測位解析ツールについて、入手をご希望される方は、以下のメ
レスにご連絡をお願いいたします。現在、CLASは日本国内向けのサービスにつき
国内の企業、研究機関や大学もしくは、日本国内の企業、研究機関や大学と連携関係がある

MENU

https://qzss.go.jp/technical/dod/clas/clas_test-library.html

MADOCAテストライブラリ

2023年06月05日

いいね！23　ポスト

MADOCAテストライブラリ（MADOCALIB）は、高精度測位補強サービス（MADOCA-PPP）に対応した製品を検討されている方向けに、参照実装として提供するものです。後処理専用ツールとなっており、実装アルゴリズム検討時に参照データ生成ツールとしてご利用いただけます。

本ツールは、GNSS精密測位用プログラムとして広く利用されている

- RTKLIB：An Open Source Program Package for GNSS Positioning

を拡張して構成されています。本ツールには、以下の機能およびサンプルデータが含まれており、ユーザ側でMADOCA-PPPをサポートする測位ソフトウェアを開発する際の参考とすることで、効率的に開発を進めることができます。

（1）本ライブラリのマニュアル
（2）PPP及びPPP-AR対応の後処理測位解析ツール

上記について、入手をご希望される方は、みちびきWebお問合せフォームより以下の情報についてご連絡をお願いいたします。現在、MADOCALIBβ版を、原則として、日本国内の企業、研究機関や大学もしくは、内閣府との間にQZSSに関する協定がある海外機関又は当該協定相手からの推薦がある海外の企業、研究機関や大学、日本国内の企業、研究機関や大学と連携関係がある、もしくは共同研究契約のある海外の企業、研究機関や大学に提供することとしています。申請の際は、（a）実行形式ファイル、（b）ソースコード、の2つの配布形態がありますのでどちらかご指定ください。なお、（a）実行形式ファイルか（b）ソースコードか、変更するかしないかを問わず、再配布の可否はライセンス契約書の定めに従います。

- 連絡先：みちびきWebお問合せフォーム

お問合せ内容に以下を記載ください。なお、希望者から提供を受けた個人情報については、日本国の法令に基づき適切に管理します。

[提供希望] MADOCALIB開発版
御社名
御社所在国

MENU

https://qzss.go.jp/technical/dod/madoca/madoca_test-library.html

Survey, Drone, Construction

Beyond your wall with Drogger

ドロガーで壁を越えよう

2022-05-19

Drogger RWX 国土地理院 1級 GNSS測量機に！

GNSS測量 | お知らせ | Processor | RTK

Drogger ブログ記事を検索 検索

ランキング参加中 ガジェット

とても嬉しいお知らせです。

弊社　GNSS受信機 **RWX**が検定をパスし、 20222/ 5/ 17 付けで国土地理院 1級 GNSS測量機として測量機種登録台帳に登録（No. 223）されました。これにより、国土地理院の基本測量を行える機器となりました。公共測量につきましても同様です。

2022/5/30 追記
2022/5/27付けで**RWP**も国土地理院 1級 GNSS測量機として測量機種登録台帳に登録（No. 224）されました。

https://drogger.hatenadiary.jp/entry/RWX223

農研機構

小型GNSS受信機を用いた
高精度測位マニュアル
（ドローン用対空標識編）

農研機構 農業環境変動研究センター
令和元年５月

https://www.naro.go.jp/publicity_report/publication/files/drone_GNSS.pdf

清水建設

建設機械の位置情報や法面等の地盤変位を高精度でリアルタイムに検出
～GNSSを活用した新たな測位システムを開発～

2021.07.02

清水建設（株）＜社長 井上和幸＞はこのほど、土木工事におけるICT施工の推進に向け、建設機械の位置情報や法面等の地盤変位を高精度でリアルタイムに検出できる新たなGNSS（Global Navigation Satellite System：全地球測位衛星システム）測位システムを開発しました。開発にあたっては、東京海洋大学・久保信明教授の指導を得て、RTKLIB※ソフトウェアをベースに新たなアルゴリズムを構築しました。

大規模な土木現場では、GNSSを活用した高精度な測位システムが活用されています。しかし、こうした測位システムは、同一標の測位衛星4～5ペア以上からの測位衛星信号を受信する必要がありますが、上空視界が限られると、十分な衛星数が確保できないケースがあります。さらに、反射信号や衛星配置などによる誤差を嫌うことから、オープンスカイでの適用に限られています。

新たなGNSS測位システムは、市販のアンテナ、受信機、解析装置、RTK方式の新たなアルゴリズムから構成されています。特長は、仰角45度程度までの空間に障害物がある環境下でも測位に必要な衛星数を確保し高精度測位を継続できることです。上記を可能にしたのは、国内外の測位衛星が発信する異なる周波数の測位衛星信号を同一の衛星信号と見なして処理するアルゴリズムを確立したことによります。この結果、ある時点で捕捉（交信）していた測位衛星が見えなくなっても次に現れる衛星を、機種を問わず、瞬時に解析に取り込むことで継続測位できるようになりました。

このアルゴリズムをカスタマイズすることで、急峻な山肌を背負うような土木現場でも建設機械のリアルタイムの位置情報の取得や法面等の動態観測などを行うことができます。本システムを用いた実証実験では、オープンスカイ環境下における従来のGNSS測位システムとほぼ同等の測位精度が得られることを確認しています。

当社は今後、新たなGNSS測位システムを商品化することで建設現場に広く展開し、ICT施工の普及に寄与していく考えです。

以 上

《参　考》

RTK方式の原理

GNSS衛星から発信される発信時刻が刻まれた衛星の位置情報を観測点に設けた1台のアンテナで受信し、位置情報が各衛星から観測点に到達するまでに要した時間からGNSS衛星とアンテナ間の距離を求め、観測点の位置情報を計算する。測位精度向上のために、3次元座標（緯度・経度・高度）が既知の基準点と観測点の2ヶ所で測位を

トップメッセージ
会社概要
役員一覧
経営方針
コーポレート・ガバナンス
コーポレートメッセージ
ダイバーシティ推進
コーポレートレポート
ニュースリリース
事業紹介
技術研究所
事業所一覧
シミズグループ
CM・広告ライブラリー

https://www.shimz.co.jp/company/about/news-release/2021/2021014.html

Smartphone

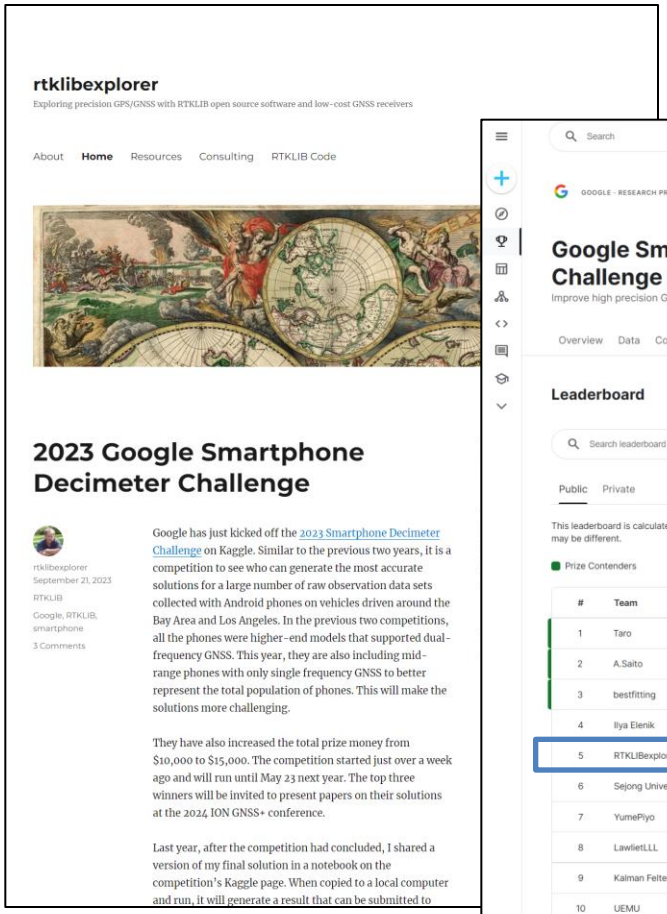

rtklibexplorer

Exploring precision GPS/GNSS with RTKLIB open source software and low-cost GNSS receivers

About Home Resources Consulting RTKLIB Code

2023 Google Smartphone Decimeter Challenge

rtklibexplorer
September 21, 2023
RTKLIB
Google, RTKLIB, smartphone
3 Comments

Google has just kicked off the 2023 Smartphone Decimeter Challenge on Kaggle. Similar to the previous two years, it is a competition to see who can generate the most accurate solutions for a large number of raw observation data sets collected with Android phones on vehicles driven around the Bay Area and Los Angeles. In the previous two competitions, all the phones were higher-end models that supported dual-frequency GNSS. This year, they are also including mid-range phones with only single frequency GNSS to better represent the total population of phones. This will make the solutions more challenging.

They have also increased the total prize money from $10,000 to $15,000. The competition started just over a week ago and will run until May 23 next year. The top three winners will be invited to present papers on their solutions at the 2024 ION GNSS+ conference.

Last year, after the competition had concluded, I shared a version of my final solution in a notebook on the competition's Kaggle page. When copied to a local computer and run, it will generate a result that can be submitted to

https://rtklibexplorer.wordpress.com/

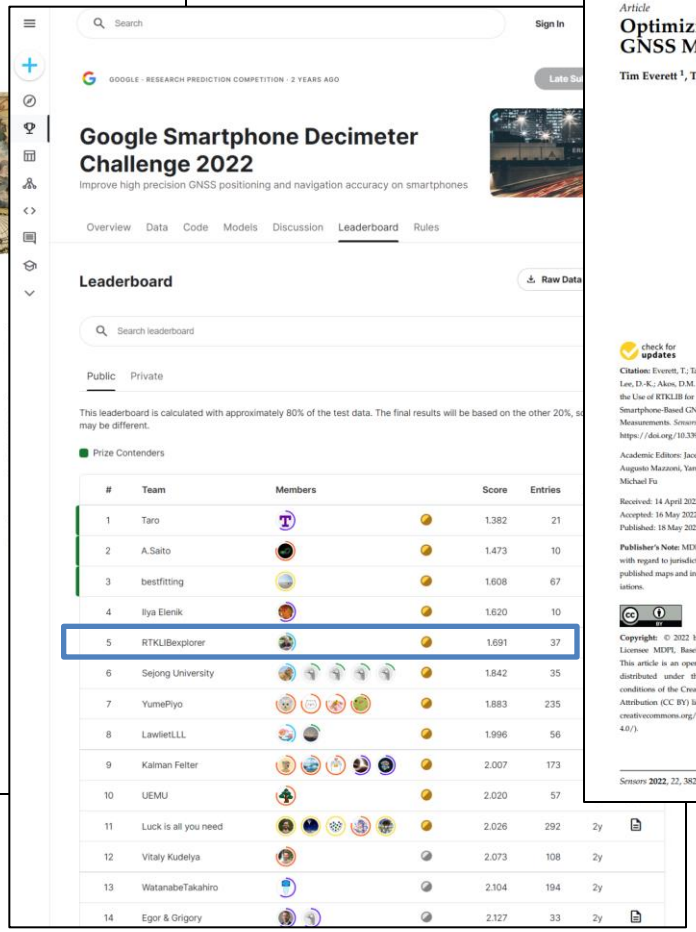

Search Sign In

GOOGLE - RESEARCH PREDICTION COMPETITION · 2 YEARS AGO

Google Smartphone Decimeter Challenge 2022

Improve high precision GNSS positioning and navigation accuracy on smartphones

Overview Data Code Models Discussion Leaderboard Rules

Leaderboard

Raw Data

Search leaderboard

Public Private

This leaderboard is calculated with approximately 80% of the test data. The final results will be based on the other 20%, so may be different.

Prize Contenders

#	Team	Members	Score	Entries	
1	Taro		1.382	21	
2	A.Saito		1.473	10	
3	bestfitting		1.608	67	
4	Ilya Elenik		1.620	10	
5	RTKLIBexplorer		1.691	37	
6	Sejong University		1.842	35	
7	YumePiyo		1.883	235	
8	LawlietLLL		1.996	56	
9	Kalman Felter		2.007	173	
10	UEMU		2.020	57	
11	Luck is all you need		2.026	292	2y
12	Vitaly Kudelya		2.073	108	2y
13	WatanabeTakahiro		2.104	194	2y
14	Egor & Grigory		2.127	33	2y

https://www.kaggle.com/competitions/smartphone-decimeter-2022

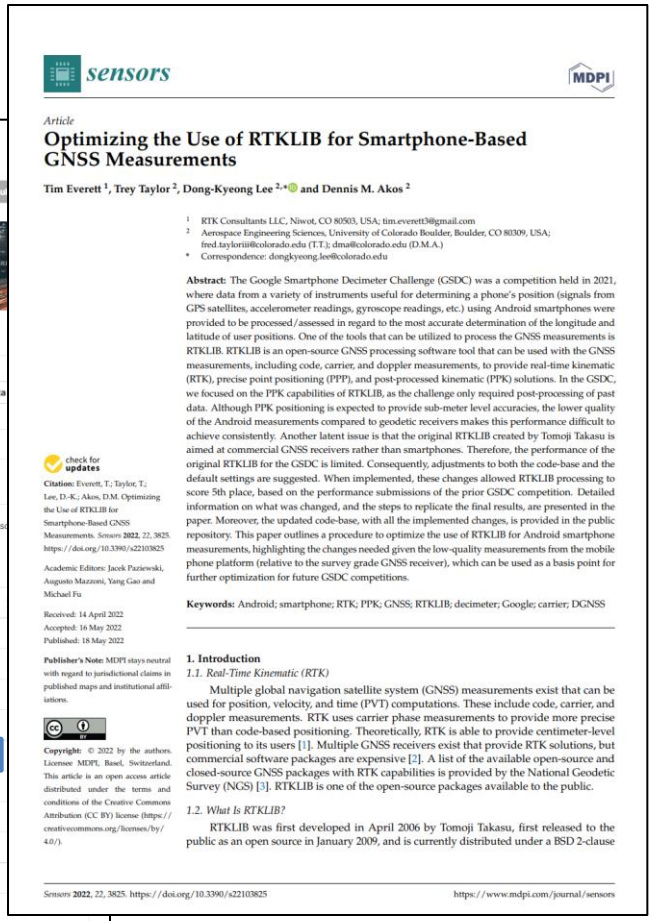

sensors MDPI

Article

Optimizing the Use of RTKLIB for Smartphone-Based GNSS Measurements

Tim Everett [1], Trey Taylor [2], Dong-Kyeong Lee [2,*] and Dennis M. Akos [2]

[1] RTK Consultants LLC, Niwot, CO 80503, USA; tim.everett3@gmail.com
[2] Aerospace Engineering Sciences, University of Colorado Boulder, Boulder, CO 80309, USA; fred.taylorii@colorado.edu (T.T.); dma@colorado.edu (D.M.A.)
* Correspondence: dongkyeong.lee@colorado.edu

Abstract: The Google Smartphone Decimeter Challenge (GSDC) was a competition held in 2021, where data from a variety of instruments useful for determining a phone's position (signals from GPS satellites, accelerometer readings, gyroscope readings, etc.) using Android smartphones were provided to be processed/assessed in regard to the most accurate determination of the longitude and latitude of user positions. One of the tools that can be utilized to process the GNSS measurements is RTKLIB. RTKLIB is an open-source GNSS processing software tool that can be used with the GNSS measurements, including code, carrier, and doppler measurements, to provide real-time kinematic (RTK), precise point positioning (PPP), and post-processed kinematic (PPK) solutions. In the GSDC, we focused on the PPK capabilities of RTKLIB, as the challenge only required post-processing of past data. Although PPK positioning is expected to provide sub-meter level accuracies, the lower quality of the Android measurements compared to geodetic receivers makes this performance difficult to achieve consistently. Another latent issue is that the original RTKLIB created by Tomoji Takasu is aimed at commercial GNSS receivers rather than smartphones. Therefore, the performance of the original RTKLIB for the GSDC is limited. Consequently, adjustments to both the code-base and the default settings are suggested. When implemented, these changes allowed RTKLIB processing to score 5th place, based on the performance submissions of the prior GSDC competition. Detailed information on what was changed, and the steps to replicate the final results, are presented in the paper. Moreover, the updated code-base, with all the implemented changes, is provided in the public repository. This paper outlines a procedure to optimize the use of RTKLIB for Android smartphone measurements, highlighting the changes needed given the low-quality measurements from the mobile phone platform (relative to the survey grade GNSS receiver), which can be used as a basis point for further optimization for future GSDC competitions.

Keywords: Android; smartphone; RTK; PPK; GNSS; RTKLIB; decimeter; Google; carrier; DGNSS

check for updates

Citation: Everett, T.; Taylor, T.; Lee, D.-K.; Akos, D.M. Optimizing the Use of RTKLIB for Smartphone-Based GNSS Measurements. *Sensors* **2022**, *22*, 3825. https://doi.org/10.3390/s22103825

Academic Editors: Jacek Paziewski, Augusto Mazzoni, Yang Gao and Michael Fu

Received: 14 April 2022
Accepted: 16 May 2022
Published: 18 May 2022

Publisher's Note: MDPI stays neutral with regard to jurisdictional claims in published maps and institutional affiliations.

Copyright: © 2022 by the authors. Licensee MDPI, Basel, Switzerland. This article is an open access article distributed under the terms and conditions of the Creative Commons Attribution (CC BY) license (https://creativecommons.org/licenses/by/4.0/).

1. Introduction

1.1. Real-Time Kinematic (RTK)

Multiple global navigation satellite system (GNSS) measurements exist that can be used for position, velocity, and time (PVT) computations. These include code, carrier, and doppler measurements. RTK uses carrier phase measurements to provide more precise PVT than code-based positioning. Theoretically, RTK is able to provide centimeter-level positioning to its users [1]. Multiple GNSS receivers exist that provide RTK solutions, but commercial software packages are expensive [2]. A list of the available open-source and closed-source GNSS packages with RTK capabilities is provided by the National Geodetic Survey (NGS) [3]. RTKLIB is one of the open-source packages available to the public.

1.2. What Is RTKLIB?

RTKLIB was first developed in April 2006 by Tomoji Takasu, first released to the public as an open source in January 2009, and is currently distributed under a BSD 2-clause

Sensors **2022**, *22*, 3825. https://doi.org/10.3390/s22103825 https://www.mdpi.com/journal/sensors

https://www.mdpi.com/1424-8220/22/10/3825

GNSS SDR

Software		GNSS-SDR	GNSS-SDRLIB	Pocket SDR
URL		https://gnss-sdr.org https://github.com/gnss-sdr	https://github.com/taroz/GNSS-SDRLIB	https://github.com/tomojitakasu/PocketSDR
Current Release		v0.0.19 (Jan 2024)	v2.0 Beta (Dec 2014)	ver. 0.11 (Jan 2024)
GitHub Stars		☆ 1048	☆ 413	☆ 200
Processing Mode		Post Processing, Real-time	Post Processing, Real-time	Post Processing, Real-time
PVT		Single, PPP	-	-
Output Format		KML, GeoJSON, GPX, RINEX, NMEA, RTCM3, Custom	RTCM3, RINEX	CSV Log
GNSS Signals	GPS	L1C/A, L2C, L5	L1C/A	L1C/A, L1C, L2C, L5
	GLONASS	L1C/A, L2C/A	L1C/A	L1C/A, L2C/A, L1OC, L2OC, L3OC
	Galileo	E1B/C, E5a, E5b, E6B	E1B	E1B/C, E5a, E5b, E6B/C
	QZSS	-	L1C/A, L1SAIF, LEX	L1C/A, L1C/B, L1C, L1S, L2C, L5, L5S, L6D/E
	BDS	B1I, B3I	B1I	B1I, B1C, B2I, B2a, B2b, B3I
	NavIC	-	-	L1-SPS, L5-SPS
	SBAS	-	L1C/A	L1C/A, L5
Supported RF Frontends		USRP, UmTRX, HackRF One, Blade RF, RTL-SDR	SiGe GN3S sampler v2/v3, Stereo, Blade RF, RTL-SDR	Pocket SDR RF Frontend
OS		Windows, Linux, macOS, others	Windows, Linux	Windows, Linux
Language		C++, C	C, C++/CLI	Python 3, C
External Library		GNU Radio, Boost, FFTW3, VOLK, Armadillo, LAPACK/BLAS, glog, gflags, matio, pugiXML, Protocol Buffers, OpenSSL, **RTKLIB**	FFTW3, LIBFEC, **RTKLIB**, libusb	FFTW3, LIBFEC, LDPC-codes, **RTKLIB**, CyAPI or libusb-1.0

MADOCA

MADOCA Architecture

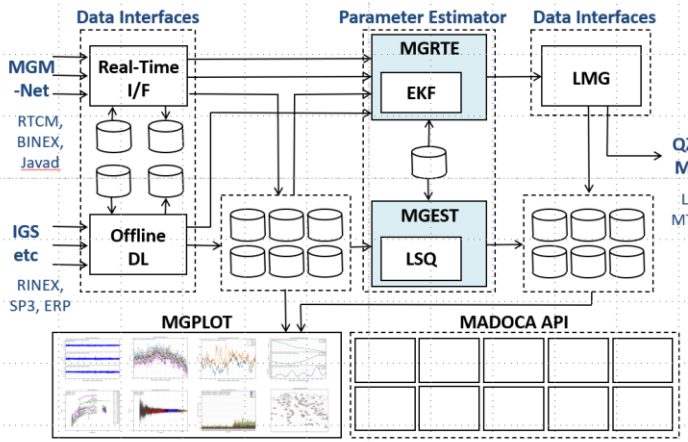

Real-Time PPP Test

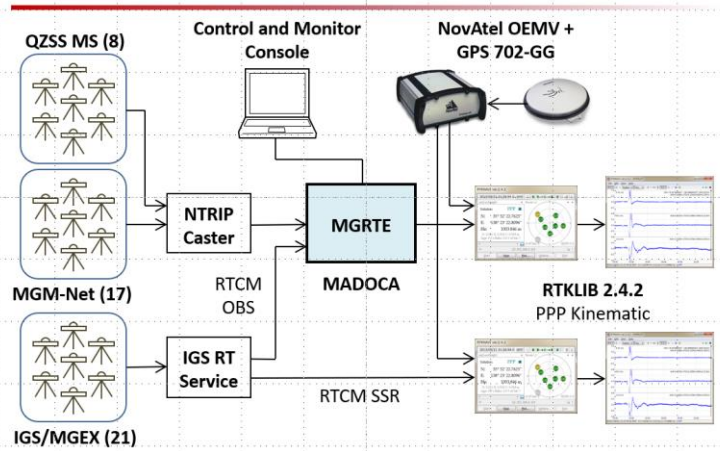

Parameter Adjustment

	Offline	Real-Time
Algorithm	Iterated Weighted LSQ	Dual-Cycle-EKF
Estimated Parameters	Orbit, SRP/Emp-Acc, Clock, Position, ZTD/Grad, Ambiguity, Bias, EOP	
Measurements	ZD Carrier-Phase and Peudo-range	
Numerical Solver	NEQ by Cholesky Factorization	Numerical Stable EKF
Clock Estimation	Parameter Elimination in NEQ	State as White-Noise or Random-Walk
Integer Ambiguity Resolution	Network AR (Ge., 2005)	Real-Time Network AR

Real-Time PPP Test Results

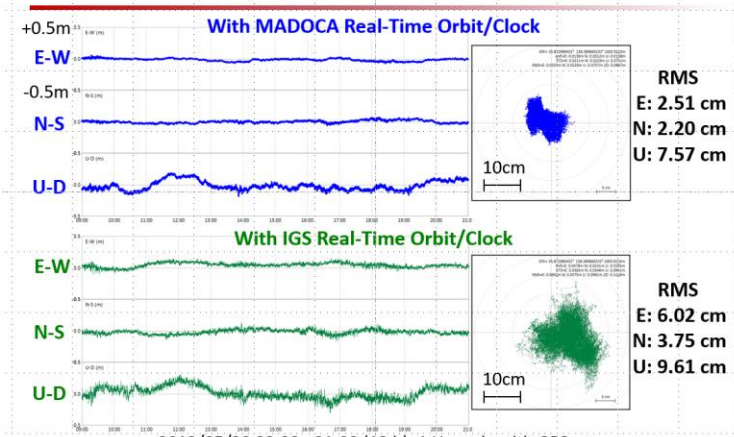

高須, 安田, 小暮, 中村, 三吉, 河手, 平原, 澤村, 複数GNSS対応高精度軌道時刻推定ツールMADOCAの開発, 第57回宇宙科学技術連合講演会, 2013/10/9-11, 米子コンベンションセンター「ビッグシップ」(https://gpspp.sakura.ne.jp/paper2005/ukaren_20131010.pdf)

PPP-AR by MADOCA and RTKLIB

FCB Estimation Flow (1)

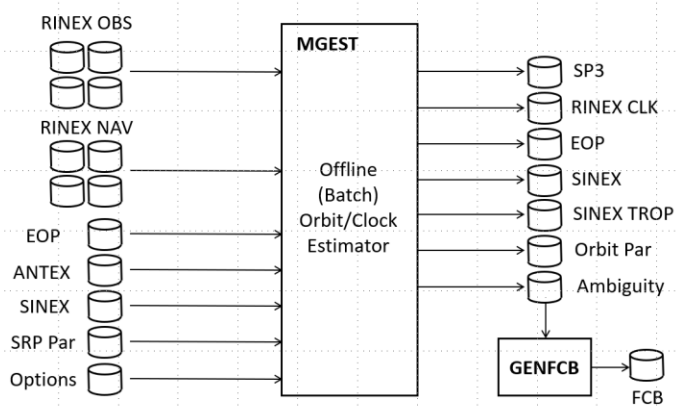

11

Partial Fixing with ILS (1)

- LAMBDA decorrelation
- MLAMBDA search
- Validation by ratio-test
- Shrink search space

```
      SOLUTION ERROR          RATIO   # OF FIXED AMBIGUITIES (N1,N2,...)
   E(m)     N(m)     U(m)
-----------------------------------------------------------------------------
  0.0024   0.0074   0.0141    1.577  12 (57 72 53 10 39 -78 40 607 -1496 -165 -576 812)
  0.0026   0.0084   0.0132    1.484  11 (57 72 53 10 39 -78 40 607 -1496 -165 -576)
 -0.0144   0.0301  -0.0198    1.537  10 (57 72 53 10 39 -78 40 607 -1496 -165)
  0.0404   0.0129  -0.0962    5.401   9 (57 72 53 10 39 -78 40 607 -1496)
  0.0295   0.0151  -0.1035    4.105   8 (57 72 53 10 39 -78 40 607)
 -0.2267   0.0351  -0.1898   13.118   7 (57 72 53 10 39 -78 40)
 -0.2288   0.0359  -0.1848   13.131   6 (57 72 53 10 39 -78)
 -0.2492   0.0396  -0.1930   49.235   5 (57 72 53 10 39)
 -0.2505   0.0391  -0.1943  102.132   4 (57 72 53 10)
```

20

User PPP Client

- **Based on RTKLIB 2.4.2 p11**
  - PPP codes are completely re-written
- **AR Modes**
  - Conventional WL/NL and rounding
  - Explicit STEC estimation and ILR (integer least square)
- **Batch and Real-time APs**
  - RNX2RTKP and RTKRCV AP
- **TEC and ZTD can be output for local-corrections**

19

Local Corr. with PPP-AR (3)

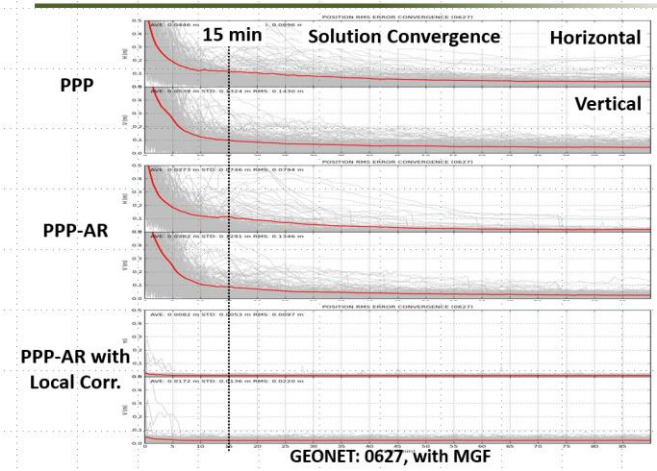

27

高須, 遠藤, 中野, 三吉, 河手, 小暮, MADOCAにおけるPPP-AR機能の拡張と評価, 第59回宇宙科学技術連合講演会, 2015/10/7-9, かごしま県民交流センター (https://gpspp.sakura.ne.jp/paper2005/ukaren_2015_ttaka.pdf)

IGS Analysis Center

JAXA

組織情報　事業内容　Fan!Fun!JAXA!　JAXA Channel　お問い合わせ　English

プレスリリース・記者会見等

TOP > プレスリリース・記者会見等 > 日本初！国際GNSS事業の解析センターに認定

ポスト　いいね！ 535　B! 0

日本初！国際GNSS事業の解析センターに認定
～宇宙技術で高精度測位社会を支えます～

2023年（令和5年）12月4日

国立研究開発法人宇宙航空研究開発機構
国土交通省国土地理院

宇宙航空研究開発機構（JAXA）と国土地理院は2023年12月、International GNSS Service（国際GNSS事業）の「解析センター」に、日本の機関として初めて認定されました。世界最高精度とされるGNSS衛星の軌道情報の算出に参画し、高精度測位に必要となる基盤の整備に貢献します。

JAXAと国土地理院は、より自律的・安定的な位置の基準の維持・管理を目的として、GNSS衛星の精密な軌道情報（精密暦：せいみつれき）の算出に共同で取り組んでいます。2023年7月から、算出した精密暦の公開を開始し、International GNSS Service（国際GNSS事業）にて品質の評価が進められてきました※。

今般、十分な高い精度を有することが確認され、12月1日（金）に開催された同事業の意思決定会議において、日本の機関として初めて国際GNSS事業の「解析センター」に認定されました。世界で最も高い精度を有し、実質的な国際標準として広く活用されている国際GNSS事業の精密暦は、各解析センターの精密暦を統合処理することで算出されています。今回の決定により、日本の精密暦が新たにこの統合処理に加えられることとなります。

解析センターとしてこの精密暦の生成に参画することで、高精度測位に必要となる基盤の整備に大きく貢献することになります。今後も、高精度測位社会の実現に向けた活動を着実に進めていきます。

※2023年6月30日報道発表資料「国内初！衛星測位分野の国際事業に国土地理院とJAXAが共同で参画 ～高精度な軌道情報の提供を通じた測位基盤の強化へ～」
https://www.jaxa.jp/press/2023/06/20230630-1_j.html
https://www.gsi.go.jp/denshi/denshi65010.html　外部リンク

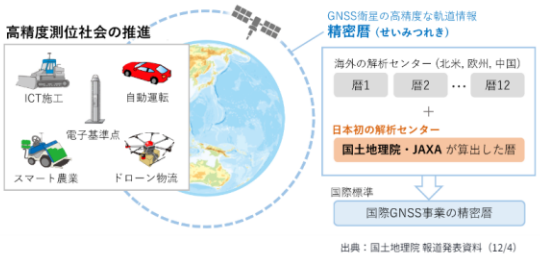

出典：国土地理院 報道発表資料（12/4）

https://www.jaxa.jp/press/2023/12/20231204-1_j.html

ScienceDirect

View PDF　Download full issue

Outline
- Highlights
- Abstract
- Keywords
- 1. Introduction
- 2. MADOCA
- 3. POD performance
- 4. PPP performance
- 5. Applications, research, and devel...
- 6. Conclusions
- Acknowledgements
- Supplementary material
- References

Show full outline

Cited by (9)

Figures (11)

Show 5 more figures

Tables (16)
- Table 1
- Table 2
- Table 3
- Table 4
- Table 5

Advances in Space Research
Volume 71, Issue 10, 15 May 2023, Pages 3927-3950
ELSEVIER

MADOCA: Japanese precise orbit and clock determination tool for GNSS

Kaori Kawate [a], Yuki Igarashi [a], Hideki Yamada [a], Kyohei Akiyama [a], Masato Okeya [a], Hiroshi Takiguchi [a], Masaya Murata [a], Toshitaka Sasaki [a], Saya Matsushita [a], Shoh Miyoshi [b], Motoyuki Miyoshi [a], Satoshi Kogure [a]

Show more

+ Add to Mendeley　Share　Cite

https://doi.org/10.1016/j.asr.2023.01.060　Get rights and content

Under a Creative Commons license　open access

Highlights

- MADOCA is POD tool supporting Multi-GNSS such as GPS, GLONASS, Galileo, BeiDou, and QZSS.
- Our POD product accuracy achieved the highest level for QZSS using our SRP model in SLR evaluation.
- The POD results have been already made available as the MADOCA products to users in various fields.

Abstract

The Japan Aerospace Exploration Agency (JAXA) has developed Multi-GNSS Advanced Demonstration tool for Orbit and Clock Analysis (MADOCA). This tool estimates orbits and clock offsets of multiple GNSS systems (Multi-GNSS), namely GPS, GLONASS, QZSS, Galileo, and BeiDou. The orbit and clock offsets are estimated in both post-processing with iterative weighted least squares and real-time processing with extended Kalman filter (EKF) using observation data collected from the International GNSS Service (IGS) network and our monitoring station network

Recommended articles
- A noise autocovariance model for SAR altimeter measureme...
  Advances in Space Research, Volume 71...
  Frithjof Ehlers, ..., Marcel Kleinherenbrink
  View PDF
- Early cataloguing of fragments from break-up events
  Advances in Space Research, Volume 71...
  A. Pastor, ..., D. Escobar
  View PDF
- The GOP analysis center: DORIS contribution to ITRF2020
  Advances in Space Research, Volume 7...
  Petr Štěpánek, ..., Vratislav Filler
  View PDF

Show 3 more articles

Article Metrics

Citations
Citation Indexes: 3

Captures
Readers: 3

PLUMX　View details

https://www.sciencedirect.com/science/article/pii/S027311772300100X

Inside Pocket SDR

GNSS Software Defined Receiver

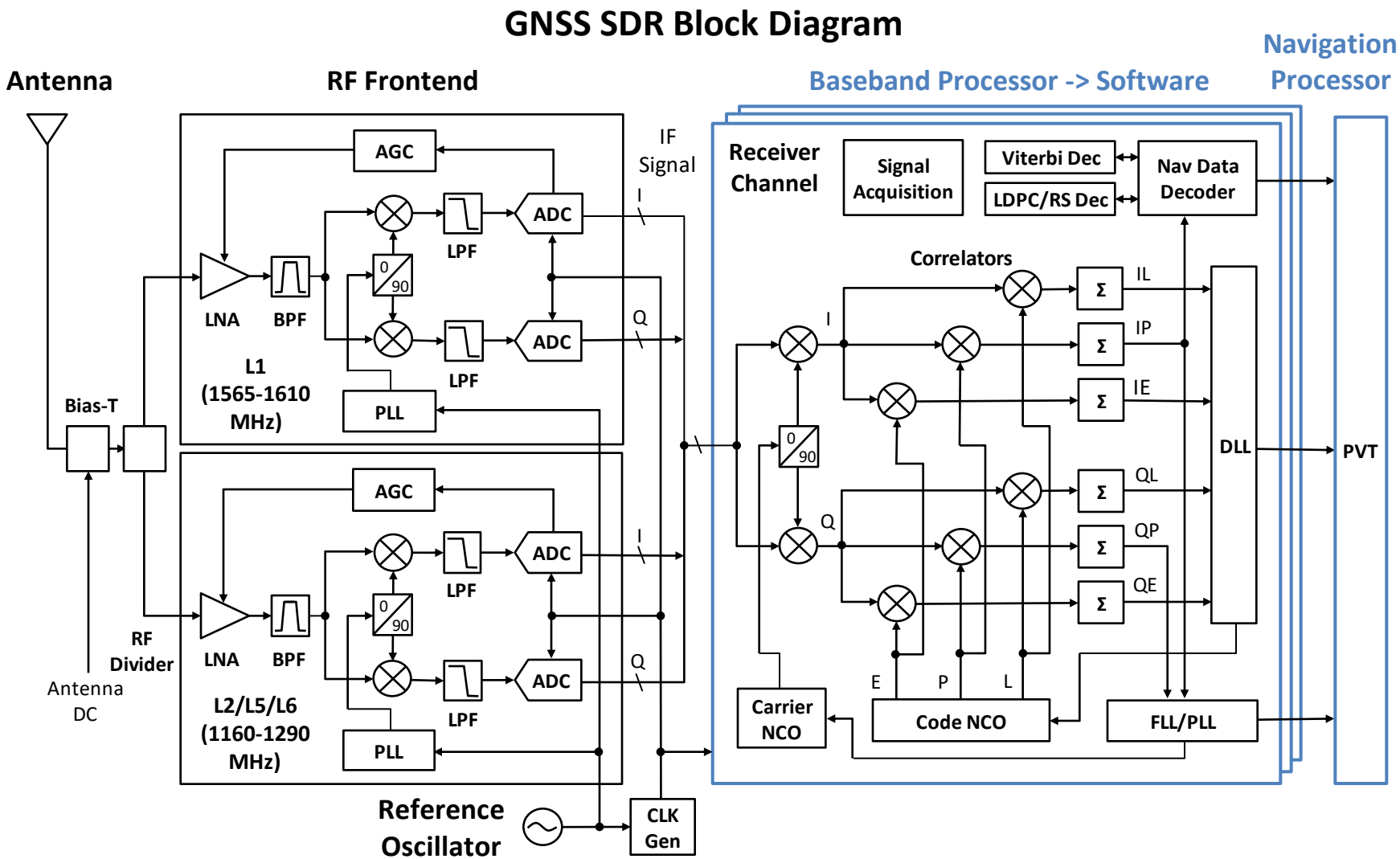

GNSS SDR RF Frontends

RF Frontend	Vendor	# of CH		RF Band	ADC	RF LSI	FPGA	Host I/F	Price
		RX	TX						
USRP N210 [1]	Ettus Research	2CH	2CH	DC ~ 6 GHz	14 bits ~ 100 Msps	Daughterboard (Optional)	Spartan 3A-DSP 3400	Giga-Ethernet	$3,455
SiGe GN3S Sampler [2]	GNSS Lab Univ Colorado	1CH	-	GPS L1	2 bits ~ 16 Msps	SiGe 4120	-	USB 2.0	$496
Stereo [3]	NSL	2CH	-	GNSS L1 + L2/L5/L6	2/3 bits 26 Msps	MAX2769B + MAX2112	Spartan-6	USB 2.0	$800
RTL-SDR [4]	RTLSDR.com	1CH	-	500 kHz ~ 1.75 GHz	8 bits ~ 2.4 Msps	Realtek RTL2832U	-	USB 2.0	~ $30
Blade RF [5]	NuBand	2CH	2CH	300 MHz ~ 3.8 GHz	12 bits ~ 40 Msps	Lime Micro. LMS6002D	Cyclone IV E	USB 3.0	$520
Lime SDR [6]	Lime Microsystems	2CH	2CH	100 kHz ~ 3.8 GHz	12 bits ~ 61 Msps	Lime Micro. LMS7002M	Cyclone IV EP4CE40F23	USB 3.0	$299
NUT4NT [7]	Amungo Navigation	4CH	-	GNSS L1/L2/L5/L6	2 bits ~ 99 Msps	NTLab NT1065	Lattice ECP5	USB 3.0	$399
Pluto SDR [8] **(ADALM-PLUTO)**	Analog Devices (ADI)	1CH	1CH	325 kHz ~ 3.8 GHz	12 bits ~ 61 Msps	ADI AD9363	Zynq Z-7010	USB 2.0	$233
Pocket SDR RF Frontend	-	**2CH**	-	**GNSS L1 + L2/L5/L6**	**2 bits ~ 32 Msps**	**MAX2771 x 2**	-	**USB 2.0**	**~ $50 (parts only)**

USRP N210

GN3S Sampler

Stereo

Blade RF

Lime SDR

RTL-SDR

NUT4NT

Pluto SDR

[1] https://www.ettus.com/all-products/un210-kit/, [2] https://ccar.colorado.edu/gnss/, [3] https://gmvnsl.com/advanced-gnns-hw-sw/,
[4] https://rtl-sdr.com/, [5] https://www.nuand.com/bladerf-1/, [6] https://limemicro.com/products/boards/limesdr/, [7] https://www.amungo-navigation.com/,
[8] https://www.analog.com/en/resources/evaluation-hardware-and-software/evaluation-boards-kits/adalm-pluto.html

MAX2771

Multiband Universal GNSS Receiver

- Multi-Constellation Support: GPS, Galileo, GLONASS, BeiDou, IRNSS, QZSS, SBAS
- Multiband Support: L1, L2, L5, E1, E5, E6, B1, B2, B3
- Programmable IF Bandwidths of 2.5MHz, 4.2MHz, 8.7MHz, 16.4MHz, 23.4MHz, 36MHz: Supports Wide-Band Carriers for Precision Applications (e.g., GPS L5, Galileo E5)
- Operates in Low IF or Zero IF Mode: Programmable IF Center Frequency
- Fractional-N Synthesizer with Integrated VCO Supports Wide Range of Reference Frequencies
- On-Chip LNAs to Support Multiple Bands
- 1.4dB Cascaded Noise Figure and 110dB of Cascaded Gain with Gain Control Range of 59dB from PGA
- Integrated Crystal Oscillator
- Supply Voltage Range: 2.7V to 3.3V
- 28-Pin, RoHS-Compliant, Thin QFN Lead-Free Package (5mm x 5mm)

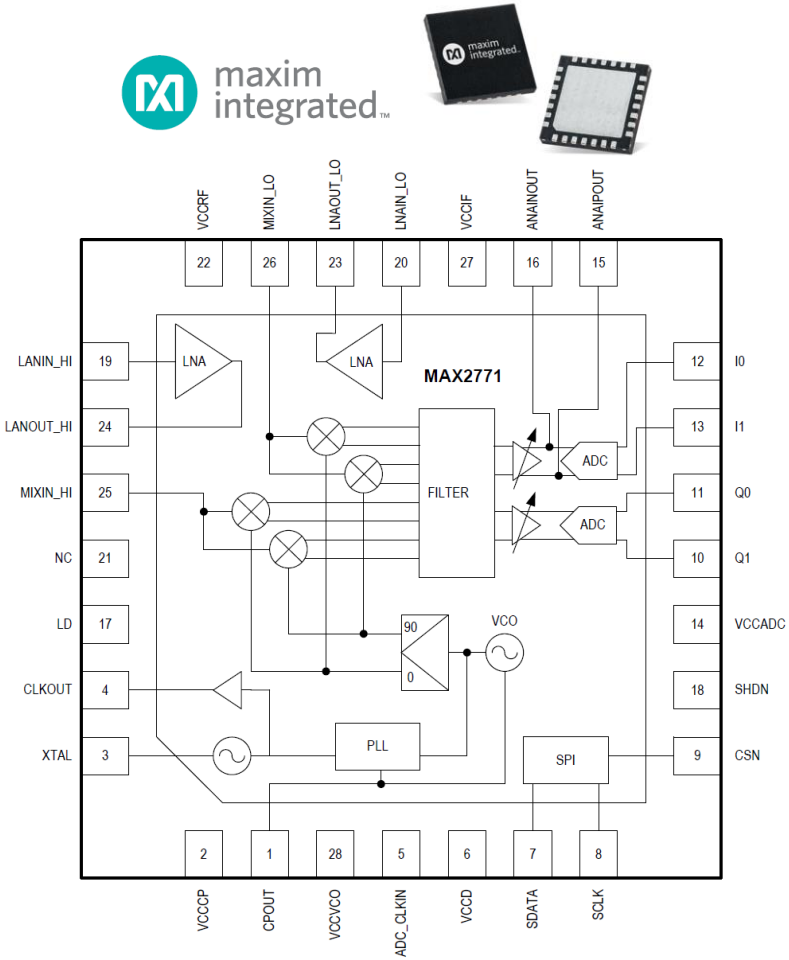

ADI/maxim integrated, MAX2771 Multiband Universal GNSS Receiver Data Sheet, 2018

Pocket SDR RF Frontend

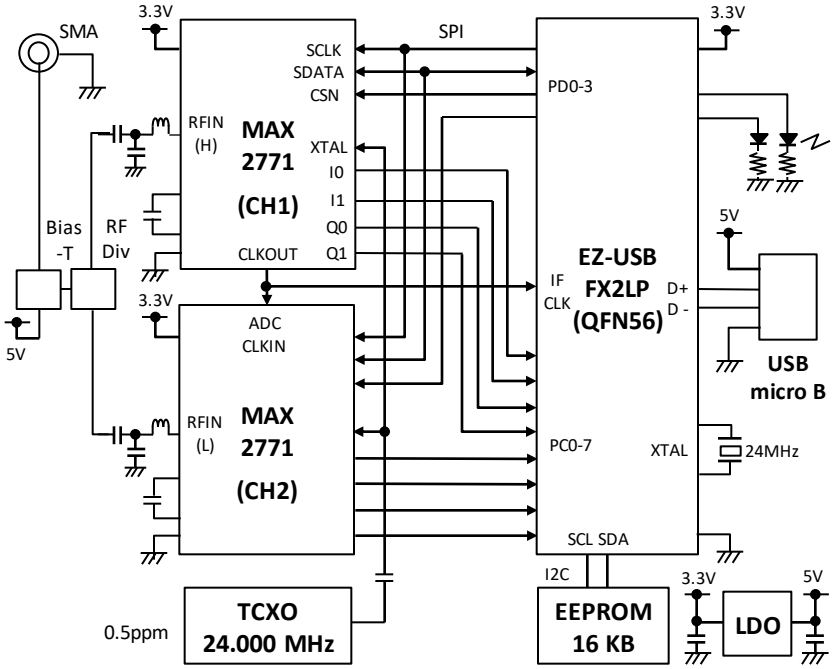

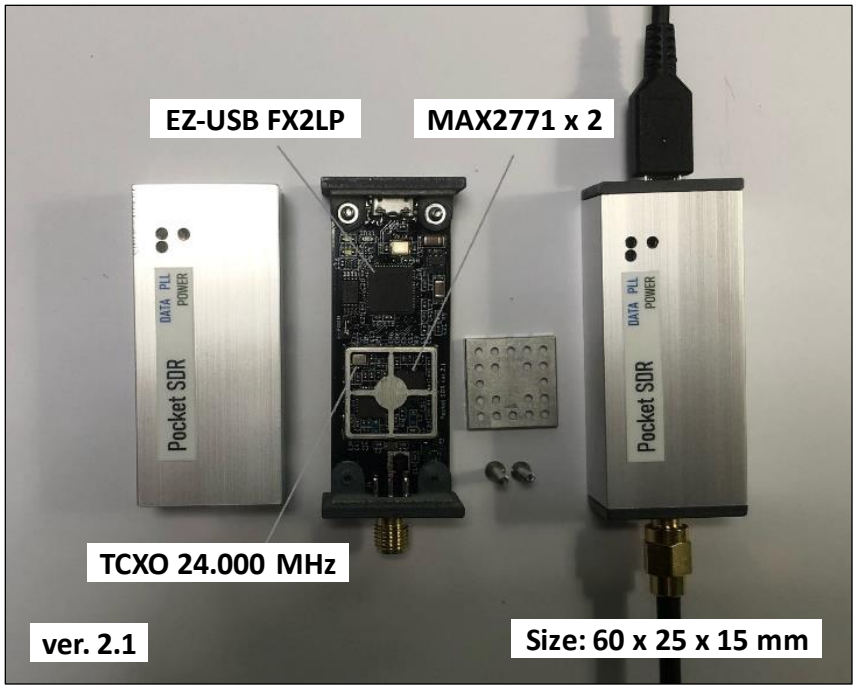

LO Frequency	:	**CH1 1525 ~ 1610 MHz (GNSS L1)**
	:	**CH2 1160 ~ 1290 MHz (GNSS L2/L5/L6)**
IF Bandwidth	:	**2 ~ 30 MHz**
Sampling Rate	:	**4, 6, 8, 12, 16, 24 or 32 Msps**
Sampling Type	:	**I or I/Q, 2 bits**
Host I/F	:	**USB 2.0, micro B (ver. 2.1)**
Power	:	**5V 140 mA, USB bus power**
Parts Cost	:	**~ $50**

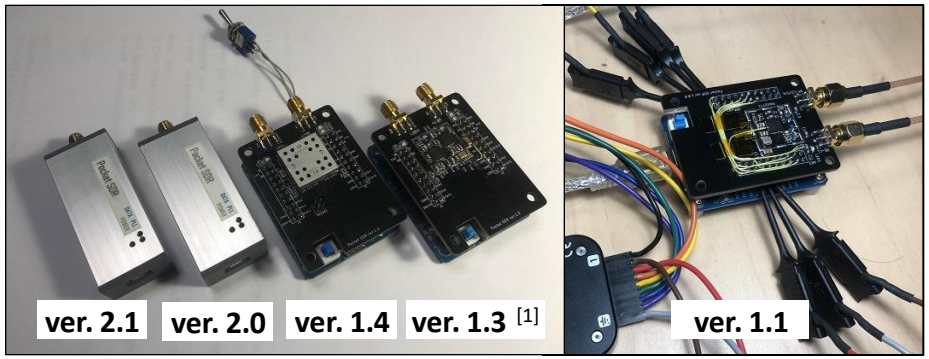

[1] https://blog.goo.ne.jp/osqzss/e/4009bf9de7fe1b6a2852064cec991587, https://blog.goo.ne.jp/osqzss/e/d86df04de96123fd5c73bbb6db6e8bc5

MAX2771 Register Settings

> pocket_conf PocketSDR/conf/pocket_L1L5_24MHz.conf; pocket_conf -a

```
#
#  Pocket SDR device settings (MAX2771)
#
#  [CH1] F_LO = 1575.420 MHz, F_ADC = 24.000 MHz (IQ), F_FILT =  0.0 MHz, BW_FILT =  4.2 MHz
#  [CH2] F_LO = 1176.450 MHz, F_ADC =  0.000 MHz (IQ), F_FILT =  0.0 MHz, BW_FILT = 16.4 MHz

[CH1]
CHIPEN          =      1  # Chip enable (0:disable,1:enable)
IDLE            =      0  # Idle enable (0:operating-mode,1:idle-mode)
MIXPOLE         =      0  # Mixer pole selection (0:13MHz,1:36MHz)
LNAMODE         =      0  # LNA mode selection (0:high-band,1:low-band,2:disable)
MIXERMODE       =      0  # Mixer mode selection (0:high-band,1:low-band,2:disable)
FCEN            =      0  # IF filter center frequency: (128-FCEN)/2*{0.195|0.66|0.355} MHz
FBW             =      2  # IF filter BW (0:2.5MHz,1:8.7MHz,2:4.2MHz,3:23.4MHz,4:36MHz,
                          # 7:16.4MHz)
F3OR5           =      1  # Filter order selection (0:5th,1:3rd)
FCENX           =      0  # Polyphase filter selection (0:lowpass,1:bandpass)
FGAIN           =      1  # IF filter gain setting (0:-6dB,1:normal)
ANAIMON         =      0  # Enable continuous spectrum monitoring (0:disable,1:enable)
IQEN            =      1  # I and Q channel enable (0:I-CH-only,1:I/Q-CH)
GAINREF         =    170  # AGC gain reference value (0-4095)
SPI_SDIO_CONFIG =      0  # SPI SDIO pin config (0:none,1:pull-down,2:pull-up,3:bus-hold)
AGCMODE         =      0  # AGC mode control (0:independent-I/Q,2:gain-set-by-GAININ)
FORMAT          =      1  # Output data format (0:unsigned,1:sign-magnitude,
                          # 2:2's-complement)
BITS            =      2  # Number of bits in ADC (0:1bit,2:2bit,4:3bit)
DRVCFG          =      0  # Output driver config (0:CMOS-logic,2:analog)
DIEID           =      0  # Identifiers version of IC
GAININ          =     58  # PGA gain value programming in steps of approx 1dB per LSB (0-63)
HILODEN         =      0  # Enable output driver to drive high loads (0:disable,1:enable)
FHIPEN          =      0  # Enable highpass coupling between filter and PGA
                          # (0:disable,1:enable)
PGAIEN          =      1  # I-CH PGA enable (0:disable,1:enable)
PGAQEN          =      1  # Q-CH PGA enable (0:disable,1:enable)
STRMEN          =      0  # Enable DSP interface (0:disable,1:enable)
STRMSTART       =      0  # Enable data streaming (rising edge)
STRMSTOP        =      0  # Disable data streaming (rising edge)
STRMBITS        =      1  # Number of bits streamed (1:IMSB/ILSB,3:IMSB/ILSB/QMSB/QLSB)
STAMPEN         =      0  # Enable insersion of frame numbers (0:disable,1:enable)
TIMESYNCEN      =      0  # Enable output of time sync pulse when streaming enabled by
                          # STRMEN
DATASYNCEN      =      0  # Enable sync pulse at DATASYNC
STRMRST         =      0  # Reset all counters
LOBAND          =      0  # Local oscillator band selection (0:L1,1:L2/L5)
REFOUTEN        =      1  # Output clock buffer enable (0:disable,1:enable)
IXTAL           =      1  # Current programing for XTAL (1:normal,3:high-current)
ICP             =      0  # Charge pump current selection (0:0.5mA,1:1mA)
INT_PLL         =      1  # PLL mode control (0:fractional-N,1:integer-N)
PWRSAV          =      0  # Enable PLL power-save mode (0:disable,1:enable)
NDIV            =  26257  # PLL integer division ratio (36-32767):
                          # F_LO=F_XTAL/RDIV*(NDIV+FDIV/2^20)
RDIV            =    400  # PLL reference division ratio (1-1023)
FDIV            =      0  # PLL fractional division ratio (0-1048575)
EXTADCCLK       =      0  # External ADC clock selection (0:internal,1:ADC_CLKIN)
PREFRACDIV_SEL  =      0  # Clock pre-divider selection (0:bypass,1:enable)
REFCLK_L_CNT    =      0  # Clock pre-divider L counter value (0-4095):
                          # L_CNT/(4096-M_CNT+L_CNT)
REFCLK_M_CNT    =      0  # Clock pre-divider M counter value (0-4095)
ADCCLK          =      0  # Integer clock div/mul selection (0:enable,1:bypass)
REFDIV          =      3  # Integer clock div/mul ratio (0:x2,1:1/4,2:1/2,3:x1,4:x4)
FCLKIN          =      0  # ADC clock divider selection (0:bypass,1:enable)
ADCCLK_L_CNT    =      0  # ADC clock divider L counter value (0-4095):
                          # L_CNT/(4096-M_CNT+L_CNT)
ADCCLK_M_CNT    =      0  # ADC clock divider M counter value (0-4095)
CLKOUT_SEL      =      1  # CLKOUT selection (0:integer-clock-div/mul,1:ADC-clock)
MODE            =      0  # DSP interface mode selection

[CH2]
CHIPEN          =      1  # Chip enable (0:disable,1:enable)
IDLE            =      0  # Idle enable (0:operating-mode,1:idle-mode)
MIXPOLE         =      0  # Mixer pole selection (0:13MHz,1:36MHz)
LNAMODE         =      1  # LNA mode selection (0:high-band,1:low-band,2:disable)
MIXERMODE       =      1  # Mixer mode selection (0:high-band,1:low-band,2:disable)
FCEN            =      0  # IF filter center frequency: (128-FCEN)/2*{0.195|0.66|0.355} MHz
FBW             =      7  # IF filter BW (0:2.5MHz,1:8.7MHz,2:4.2MHz,3:23.4MHz,4:36MHz,
                          # 7:16.4MHz)
F3OR5           =      1  # Filter order selection (0:5th,1:3rd)
...
```

Pocket SDR Signal IDs (1/3)

System	Carrier Freq. (MHz)	Signal	I/Q	Min Rec. Power (dBW)	Modulation	Primary Code			Overlay Code		Navigation Data					Notes	Pocket SDR Signal ID
						Length (chip)	Chip Rate (Mcps)	Cycle (ms)	Length (chip)	Cycle (ms)	Data	Symbol Rate (sps)	Data Rate (bps)	FEC	MSG/SF Cycle (s)		
GPS [1][2][3]	1575.42	L1C/A	Q	-158.5	BPSK(1)	1023	1.023	1	-	1	LNAV	50	50	-	6.0		L1CA
		L1P(Y)*1	I	-161.5	BPSK(10)	1week	10.23	1week	-	1week	LNAV	50	50	-	-		-
		L1M*3	I	?	BOC(10,5)	?	5.115	?	?	?	?	?	?	?	-	IIR-M~	-
		L1C-D	I	-163.0	BOC(1,1)	10230	1.023	10	-	10	CNAV-2	100	50	BCH,LDPC	18.0	III~	L1CD
		L1C-P	I	-158.25	TMBOC(6,1,4/33)	10230	1.023	10	1800	18000	-	-	-	-	-		L1CP
	1227.6	L2C/A	Q	-164.5	BPSK(1)	1023	1.023	1	-	1	LNAV	50	50	-	6.0	IIR-M~	-
		L2P(Y)*1	I	-164.5/-161.5	BPSK(10)	1week	10.23	1week	-	1week	LNAV	50	50	-	-		-
		L2M*3	I	?	BOC(10,5)	?	5.115	?	?	?	?	?	?	?	?	IIR-M~	-
		L2C-M	Q/I	-160.0/ -158.5	BPSK(1)+TDM	10230	0.5115	20	-	20	LNAV	50	50	-	6.0	IIR-M~	-
											CNAV	50	25	1/2	12.0		L2CM
		L2C-L			BPSK(1)+TDM	767250	0.5115	1500	-	1500	-	-	-	-	-		-
	1176.45	L5-I	I	-157.9/-157.0	BPSK(10)	10230	10.23	1	10 (NH)	10	CNAV	100	50	1/2	6.0	IIF~	L5I
		L5-Q	Q	-157.9/-157.0	BPSK(10)	10230	10.23	1	20 (NH)	20	-	-	-	-	-		L5Q
GLONASS [4][5][6][7]	1602.0 + 0.5625K*2	L1C/A***	I	-161.0	BPSK(0.5)	511	0.511	1	- / 2**	1 / 2**	GLO-STR	40	20	Hamming	2.0		G1CA
		L1P	Q	?	BPSK(5)	5110000	5.11	1000	-	1000	?	?	?	-	-		-
	1600.995	L1OCd	Q	?	BPSK(1)+TDM	1023	0.5115	2	2 (MC)	4	GLO-STR	250	125	1/2	2.0	K2~	G1OCD
		L1OCp			BOC(1,1)+TDM	4092	0.5115	8	-	8	-	-	-	-	-		G1OCP
		L1SC *4	I	?	?	?	?	?	?	?	?	?	?	?	?		-
	1246.0 + 0.4375K*2	L2C/A***	I	-167.0	BPSK(0.5)	511	0.511	1	- / 2**	1 / 2**	GLO-STR	40	20	Hamming	2.0		G2CA
		L2P	Q	?	BPSK(5)	5110000	5.11	1000	-	1000	?	?	?	-	-		-
	1248.06	L2CSI	Q	?	BPSK(1)+TDM	?	0.5115	?	?	?	?	?	?	?	?	K2~	-
		L2OCp			BOC(1,1)+TDM	10230	0.5115	20	50	1000	-	-	-	-	-		G2OCP
		L2SC *4	I	?	?	?	?	?	?	?	?	?	?	?	?		-
	1202.025	L3OCd	I	?	BPSK(10)	10230	10.23	1	5 (BC)	5	GLO-STR	200	100	1/2	3.0	K1~	G3OCD
		L3OCp	Q	?	BPSK(10)	10230	10.23	1	10 (NH)	10	-	-	-	-	-		G3OCP
Galileo[8]	1575.42	E1-A	Q	?	BOC(15,2.5)	?	2.5575	?	?	?	G/NAV	?	?	?	?	PRS	-
		E1-B	I	-157.0	CBOC(6,1,1/11)	4092	1.023	4	-	4	I/NAV	250	125	1/2	2.0	OS, SoL	E1B
		E1-C	I		CBOC(6,1,1/11)	4092	1.023	4	25	100	-	-	-	-	-		E1C
	1176.45	E5a-I	I	-155.0	BPSK(10)	10230	10.23	1	20	20	F/NAV	50	25	1/2	10.0	OS, CS	E5AI
		E5a-Q	Q		BPSK(10)	10230	10.23	1	100	100	-	-	-	-	-		E5AQ
	1207.14	E5b-I	I	-155.0	BPSK(10)	10230	10.23	1	4	4	I/NAV	250	125	1/2	2.0	OS, SoL	E5BI
		E5b-Q	Q		BPSK(10)	10230	10.23	1	100	100	-	-	-	-	-		E5BQ

*1 AS ON, *2 K = {-7 ... +6}, *3 Military Signal, *4 Secured Service Signal, ** Odd FCN, *** (L1OF), (L2OF)

Pocket SDR Signal IDs (2/3)

System	Carrier Freq. (MHz)	Signal	I/Q	Min Rec. Power (dBW)	Modulation	Primary Code			Overlay Code		Navigation Data					Notes	Pocket SDR Signal ID
						Length (chip)	Chip Rate (Mcps)	Cycle (ms)	Length (chip)	Cycle (ms)	Data	Symbol Rate (sps)	Data Rate (bps)	FEC	MSG/SF Cycle (s)		
Galileo (Cont.)	1191.795	E5a+b*5	-	(-152.0)	8-PSK(10)	10230	10.23	1	100	100	-	-	-	-	-		-
	1278.75	E6-A	Q	?	BOC(10,5)	?	5.115	?	?	?	G/NAV	?	?	?	?	PRS	-
		E6-B	I	-155.0	BPSK(5)	5115	5.115	1	-	1	C/NAV	1000	500	1/2	1.0	CAS, HAS	E6B
		E6-C	I		BPSK(5)	5115	5.115	1	100	100	-	-	-	-	-		E6C
QZSS [9][10][11][12]	1575.42	L1C/A	I/Q	-158.5*6	BPSK(1)	1023	1.023	1	-	1	LNAV	50	50	-	6.0		L1CA
		L1C/B	I	-158.5	BOC(1,1)	1023	1.023	1	-	1	LNAV	50	50	-	6.0		L1CB
		L1C-D	I	-163.0*7	BOC(1,1)	10230	1.023	10	-	10	CNAV2	100	50	BCH,LDPC	18.0		L1CD
		L1C-P	Q	-158.25	BOC(1,1)	10230	1.023	10	1800	18000	-	-	-	-	-	Block I	L1CP
			I	-158.25*8	TMBOC(6,1,4/33)	10230	1.023	10	1800	18000	-	-	-	-	-	Block II	L1CP
		L1S	I	-161.0/-158.5	BPSK(1)	1023	1.023	1	-	1	L1S	500	250	1/2	1.0	SLAS	L1S
	1227.6	L2C-M	I	-160.0/ -158.5	BPSK(1)+TDM	10230	0.5115	20	-	20	CNAV	50	25	1/2	12.0		L2CM
		L2C-L			BPSK(1)+TDM	767250	0.5115	1500	-	1500	-	-	-	-	-		-
	1176.45	L5-I	I	-157.9/-157.0	BPSK(10)	10230	10.23	1	10 (NH)	10	CNAV	100	50	1/2	6.0		L5I
		L5-Q	Q	-157.9/-157.0	BPSK(10)	10230	10.23	1	20 (NH)	20	-	-	-	-	-		L5Q
		L5S-I	I	-157.0*9	BPSK(10)	10230	10.23	1	-	1	L5S	500	250	1/2	1.0	Normal mode	L5SI
									2 (MC)	2	L5S	500	250	1/2	1.0	Verif. mode	L5SIV
		L5S-Q	Q		BPSK(10)	10230	10.23	1	20 (NH)	20	-	-	-	-	-	Normal mode	L5SQ
									2 (MC)	2	-	-	-	-	-	Verif. mode	L5SQV
	1278.75	L6D	I	-155.7	BPSK(5)+TDM	10230	2.5575	4	-	4	L6D	2000	2000	RS	1.0	CLAS	L6D
		L6L			BPSK(5)+TDM	1048575	2.5575	410	2 (MC)	820	-	-	-	-	-	Block I	-
		L6E			BPSK(5)+TDM	10230	2.5575	4	-	4	L6E	2000	2000	RS	1.0	MADOCA-PPP	L6E
BeiDou [13][14][15][16][17]	1561.098	B1I	I	-163.0	BPSK(2)	2046	2.046	1	20 (NH)	20	D1	50	50	BCH	6.0		B1I
								1	-	1	D2	500	500	BCH	0.6	GEO	B1I
		B1Q*10	Q	?	BPSK(2)	?	2.046	?	?	?	?	?	?	?	?		-
	1575.42	B1C-D	I	-159.0/ -161.0	BOC(1,1)	10230	1.023	10	-	10	B-CNAV1	100	50	NB-LDPC	18.0	BDS-3	B1CD
		B1C-P	I		QMBOC(6,1,4/33)	10230	1.023	10	1800	18000	-	-	-	-	-		B1CP
		B1A-D*10	Q	?	BOC(14,2)	?	2.046	?	?	?	?	?	?	?	?		-
		B1A-P*10	Q			?	2.046	?	?	?	-	-	-	-	-		-
	1176.45	B2a-D	I	-156.0/ -158.0	BPSK(10)	10230	10.23	1	5	5	B-CNAV2	200	100	NB-LDPC	3.0	BDS-3	B2AD
		B2a-P	Q		BPSK(10)	10230	10.23	1	100	100	-	-	-	-	-		B2AP
	1207.14	B2I	I	?	BPSK(2)	2046	2.046	1	20 (NH)	20	D1	50	50	BCH	6.0		B2I
								1	-	1	D2	500	500	BCH	0.6	GEO	B2I

*5 AltBOC *6 -164.0 dBW (SVID=7), *7 -167.2 dBW (SVID=7), *8 -162.4 dBW (SVID=7), *9 -162.6 dBW (SVID=3), *10 Authorized signal

Pocket SDR Signal IDs (3/3)

System	Carrier Freq. (MHz)	Signal	I/Q	Min Rec. Power (dBW)	Modulation	Primary Code			Overlay Code		Navigation Data					Notes	Pocket SDR Signal ID
						Length (chip)	Chip Rate (Mcps)	Cycle (ms)	Length (chip)	Cycle (ms)	Data	Symbol Rate (sps)	Data Rate (bps)	FEC	MSG/SF Cycle (s)		
BeiDou (Cont.)	1207.14	B2Q*10	Q	?	BPSK(10)	10230	10.23	1	?	?	?	?	?	?	?		-
		B2b-I	I	-160.0/ -162.0	BPSK(10)	10230	10.23	1	-	1	B-CNAV3	1000	500	NB-LDPC	1.0	BDS-3	B2BI
											B2b-PPP	1000	500	NB-LDPC	1.0	BDS-3, GEO	B2BI
		B2b-Q*10	Q	?	BPSK(10)	10230	10.23	1	?	?	?	?	?	?	?	BDS-3	-
	1191.795	B2a+b*11	-	?	8-PSK(10)	10230	10.23	1	?	?	-	-	-	-	-		-
	1268.52	B3I	I	-163.0	BPSK(10)	10230	10.23	1	20 (NH)	20	D1	50	50	BCH	6.0		B3I
								1	-	1	D2	500	500	BCH	1.0	GEO	B3I
		B3Q*10	Q	?	BPSK(10)	?	10.23	?	?	?	?	?	?	?	?		-
		B3A-D*10	I	?	BPSK(10)	?	10.23	?	?	?	?	?	?	?	?	BDS-3	-
		B3A-P*10	I		BPSK(10)	?	10.23	?	?	?	-	-	-	-	-		-
NavIC [18][19]	1575.42	L1-SPS-D	Q	-159.6	BOC(1,1)	10230	1.023	10	-	10	IRN-NAV	100	50	BCH,LDPC	18.0	NVS-01~	I1SD
		L1-SPS-P	I	-158.2	CSBOC(6,1,4/33)	10230	1.023	10	1800	18000	-	-	-	-	-		I1SP
	1176.45	L5-SPS	*12	-159.0	BPSK(1)	1023	1.023	1	-	1	IRN-NAV	50	25	1/2	12.0		I5S
		L5-RS-D	*12	?	BOC(5,2)	?	2.046	?	?	?	?	50	25	1/2	?	*10	-
		L5-RS-P	*12	?	BOC(5,2)	?	2.046	?	?	?	-	-	-	-	-	*10	-
	2492.028	S-SPS	*12	-162.3	BPSK(1)	1023	1.023	1	-	1	IRN-NAV	50	25	1/2	12.0		ISS
		S-RS-D	*12	?	BOC(5,2)	?	2.046	?	?	?	?	50	25	1/2	?	*10	-
		S-RS-P	*12	?	BOC(5,2)	?	2.046	?	?	?	-	-	-	-	-	*10	-
SBAS	1575.42	L1C/A	I	-	BPSK(1)	1023	1.023	1	-	1	SBAS	500	250	1/2	1.0	PRN 120-158	L1CA
	1176.45	L5-I	I	-	BPSK(10)	10230	10.23	1	2 (MC)	2	L5 SBAS	500	250	1/2	1.0		L5I
		L5-Q	Q	-	BPSK(10)	10230	10.23	1	2 (MC)	2	-	-	-	-	-		L5Q

*10 Authorized signal, *11 ACE-BOC, *12 Interplex Modulation

[1] IS-GPS-200K, Navstar GPS space segment/navigation user interfaces - interface specification, 2019, [2] IS-GPS-800F, Navstar GPS space segment/user segment L1C interface - interface specification, 2019, [3] IS-GPS-705A, Navstar GPS space segment/user segment L5 interface - interface specification, 2010, [4] GLONASS interface control document - navigation radiosignal in bands L1, L2, version 5.1, 2008, [5] GLONASS interface control document - code division multiple access open service navigation signal in L1 frequency band, edition 1.0, 2016, [6] GLONASS interface control document - code division multiple access open service navigation signal in L2 frequency band, edition 1.0, 2016, [7] GLONASS interface control document - code division multiple access open service navigation signal in L3 frequency band, edition 1.0, 2016, [8] European GNSS (Galileo) open service signal-in-space interface control document (OS SIS ICD), Issue 1, Revision 3, 2016, [9] Quasi-Zenith satellite system interface specification - satellite positioning, navigation and timing service (IS-QZSS-PNT-003), 2018, [10] Quasi-zenith satellite system interface specification - sub-meter level augmentation service (IS-QZSS-L1S-003), 2018, [11] Quasi-zenith satellite system interface specification - centimeter level augmentation service (IS-QZSS-L6-003), 2018, [12] Quasi-zenith satellite system interface specification - positioning technology verification service (IS-QZSS-TV-004), 2023, [13] BeiDou navigation satellite system signal in space interface control document - open service signal B1I, version 3, 2019, [14] BeiDou navigation satellite system signal in space interface control document - open service signal B1C, version 1.0, 2017, [15] BeiDou navigation satellite system signal in space interface control document - open service signal B2a, version 1.0, 2017, [16] BeiDou navigation satellite system signal in space interface control document - open service signal B3I, version 1.0, 2018, [17] BeiDou navigation satellite system signal in space interface control document - Precise Point Positioning service signal PPP-B2b, version 1.0, 2020, [18] Indian Regional Navigation Satellite System, Signal in space ICD for standard positioning service version 1.1, 2017, [19] NAVIC signal in space ICD for standard positioning service in L1 frequency version 1.0, 2023

Error Detection and Correction

- **LNAV Parity**
  - GPS/QZSS: L1C/A, QZSS: L1C/B
- **Hamming Code**
  - GLONASS: L1C/A, L2C/A
- **CRC (Cyclic Redundancy Check)**
  - Others
- **Convolutional Code (r=1/2, k=7)**
  - GPS/QZSS: L2C-M, L5-I, GLONASS: L1OCd, L3OCd, Galileo: E1B, E5a-I, E5b-I, E6B, QZSS: L1S, L5S-I, NavIC: L1-SPS-D, L5-SPS, S-SPS, SBAS: L1C/A, L5-I
- **BCH Code**
  - GPS/QZSS: L1C-D, BDS: B1I, B2I, B3I, NavIC: L1-SPS-D
- **RS (Reed Solomon) Code**
  - QZSS: L6D, L6E
- **LDPC (Low Density Parity Check) Code**
  - GPS/QZSS: L1C-D, NavIC: L1-SPS-D
- **NB-LDPC (64-ary LDPC) Code**
  - BDS: B1C-D, B2a-D, B2b-D

Real-Time Processing

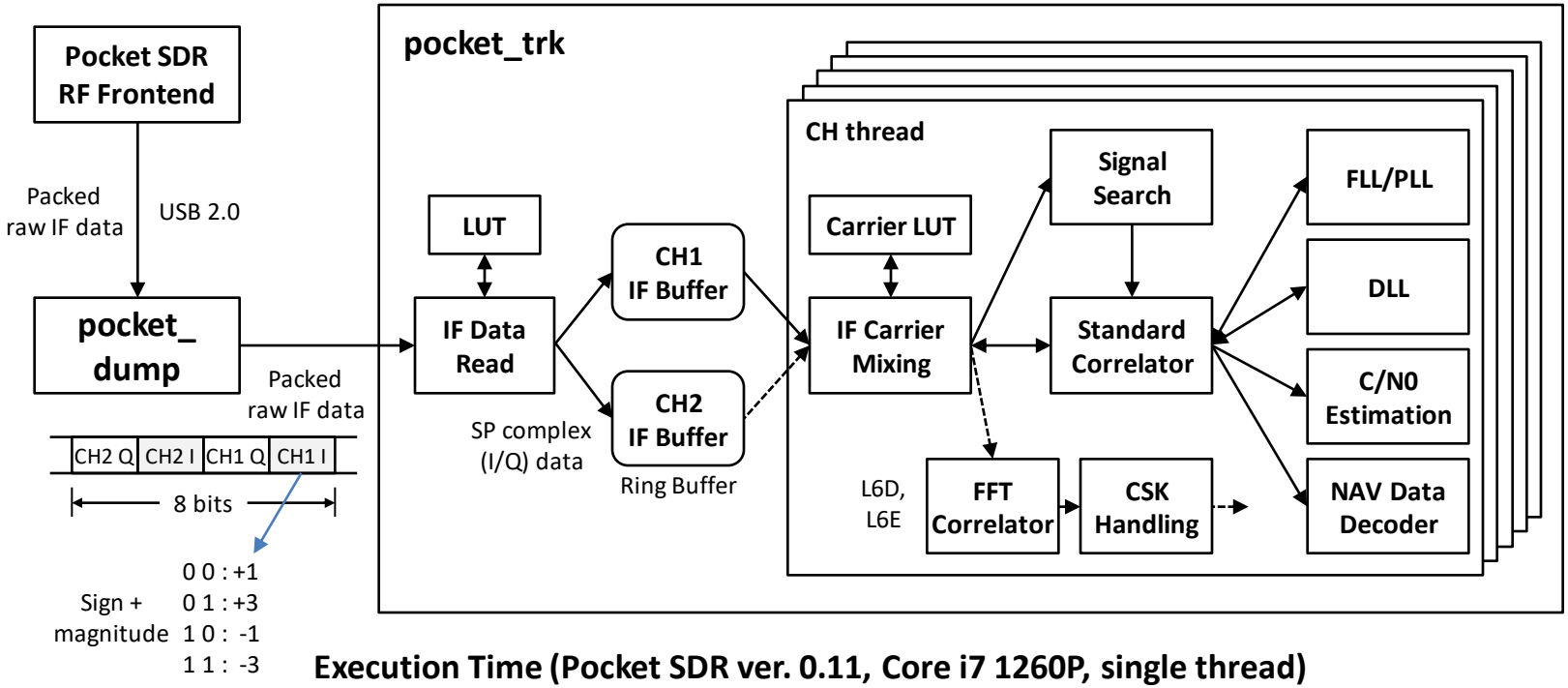

Execution Time (Pocket SDR ver. 0.11, Core i7 1260P, single thread)

	Python			C+AVX2+FFTW3F (ms)		
N	mix_carr	corr_std	corr_fft	mix_carr	corr_std	corr_fft
12000	0.0343	0.0494	0.2094	0.0164	0.0274	0.0752
16000	0.0451	0.0628	0.2886	0.0197	0.0344	0.0769
24000	0.0683	0.0842	0.4415	0.0318	0.0495	0.1381
32000	0.0954	0.1171	0.5960	0.0358	0.0579	0.1667
32768	0.1036	0.1347	0.5653	0.0367	0.0591	0.1886
48000	0.1514	0.1889	0.9936	0.0501	0.0826	0.2877
65536	0.2268	0.2621	1.2912	0.0648	0.1154	0.3915
96000	0.3179	0.4063	2.1467	0.0963	0.1717	0.8125

24 Msps x 1 ms
(coherent integration)

mix_carr: IF carrier mixing
corr_std: standard correlator with IF carrier mixing
corr_fft: FFT correlator with IF carrier mixing

Correlator by SIMD

PocketSDR/src/sdr_func.c

```
// inner product of complex and real ---------------------------------------
static void dot_cpx_real(const sdr_cpx_t *a, const float *b, int N, float s,
    sdr_cpx_t *c)
{
    int i = 0;
    (*c)[0] = (*c)[1] = 0.0f;
#ifdef AVX2
    __m256i idx1 = _mm256_set_epi32(3, 3, 2, 2, 1, 1, 0, 0);
    __m256i idx2 = _mm256_set_epi32(7, 7, 6, 6, 5, 5, 4, 4);
    __m256 ymm1 = _mm256_setzero_ps();
    __m256 ymm2 = _mm256_setzero_ps();
    for ( ; i < N - 7; i += 8) {
        __m256 ymm3 = _mm256_loadu_ps((float *)(a + i));
        __m256 ymm4 = _mm256_loadu_ps((float *)(a + i + 4));
        __m256 ymm5 = _mm256_loadu_ps(b + i);
        __m256 ymm6 = _mm256_permutexvar_ps(idx1, ymm5);
        __m256 ymm7 = _mm256_permutexvar_ps(idx2, ymm5);
        ymm1 = _mm256_fmadd_ps(ymm3, ymm6, ymm1);
        ymm2 = _mm256_fmadd_ps(ymm4, ymm7, ymm2);
    }
    float d[8], e[8];
    _mm256_storeu_ps(d, ymm1);
    _mm256_storeu_ps(e, ymm2);
    (*c)[0] += d[0] + d[2] + d[4] + d[6] + e[0] + e[2] + e[4] + e[6];
    (*c)[1] += d[1] + d[3] + d[5] + d[7] + e[1] + e[3] + e[5] + e[7];
#endif
    for ( ; i < N; i++) {
        (*c)[0] += a[i][0] * b[i];
        (*c)[1] += a[i][1] * b[i];
    }
    (*c)[0] *= s;
    (*c)[1] *= s;
}
```

x86 SIMD (Single-Instruction Multiple-Data):
AVX2 (Advanced Vector Extension 2) + FMA (Fused Multiply-Add)

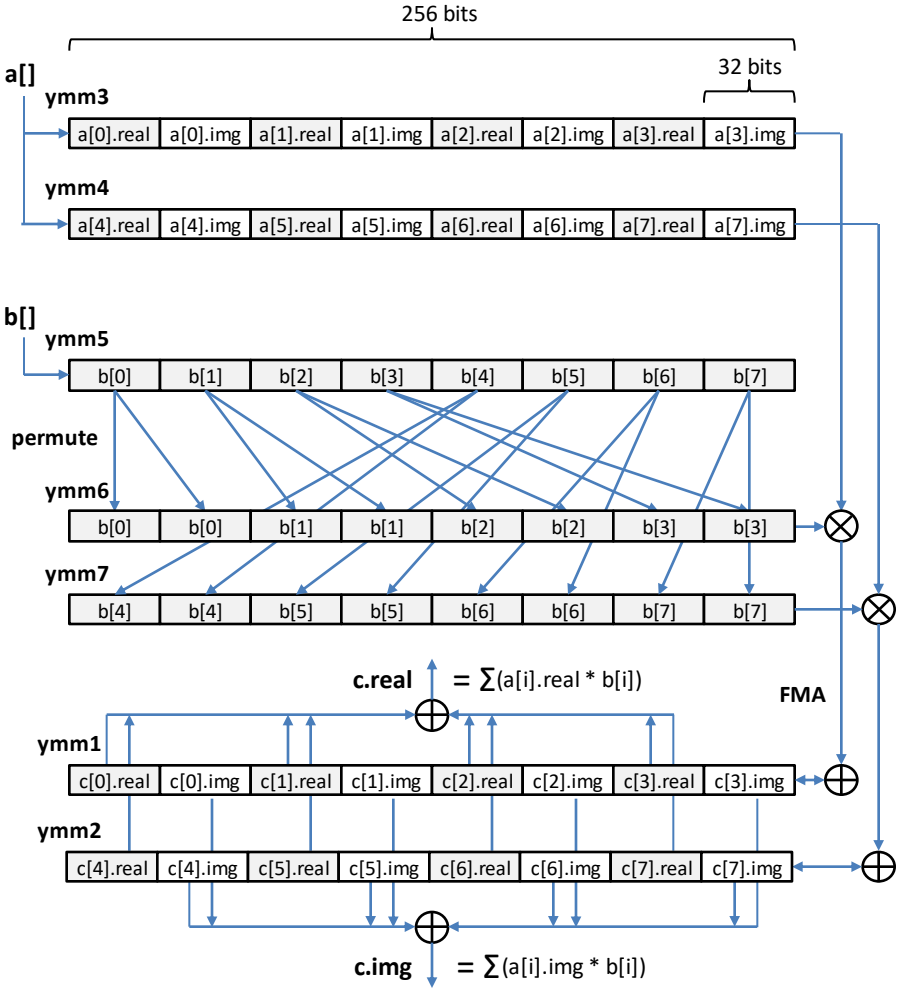

QZSS L6 Signal

Carrier Frequency: 1278.75 MHz, Modulation: CSK + BPSK(5)

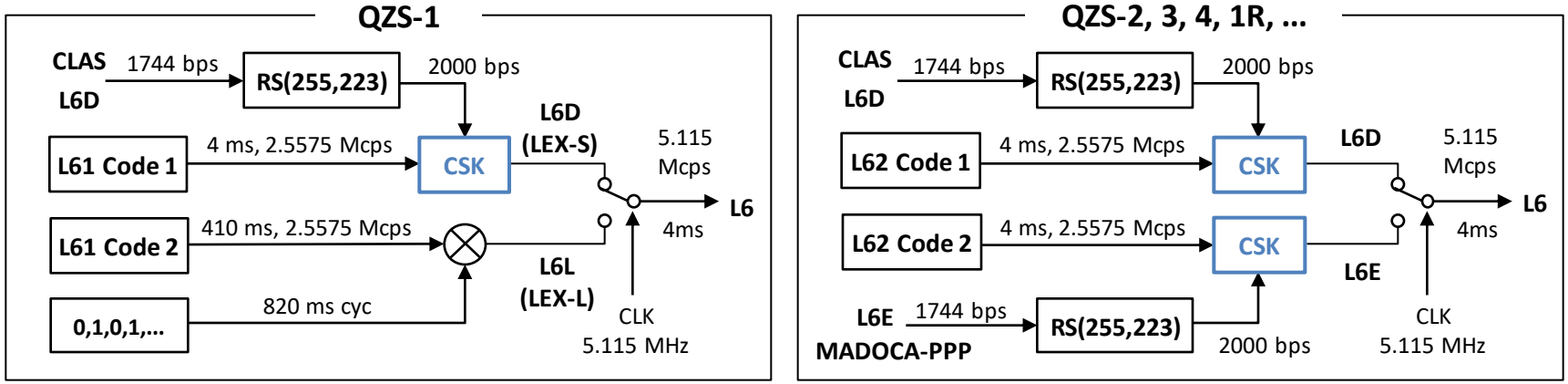

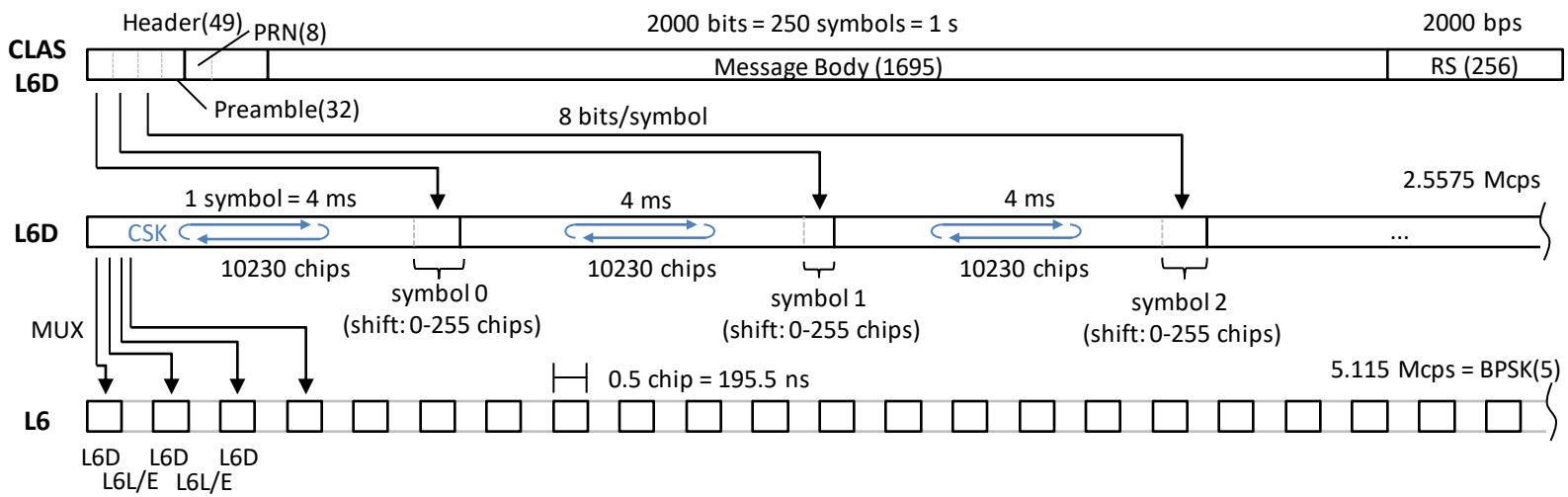

[1] IS-QZSS-L6-003, Quasi-Zenith Satellite System Interface Specification Centimeter Level Augmentation Service, August 20, 2020

L6 Signal Acquisition

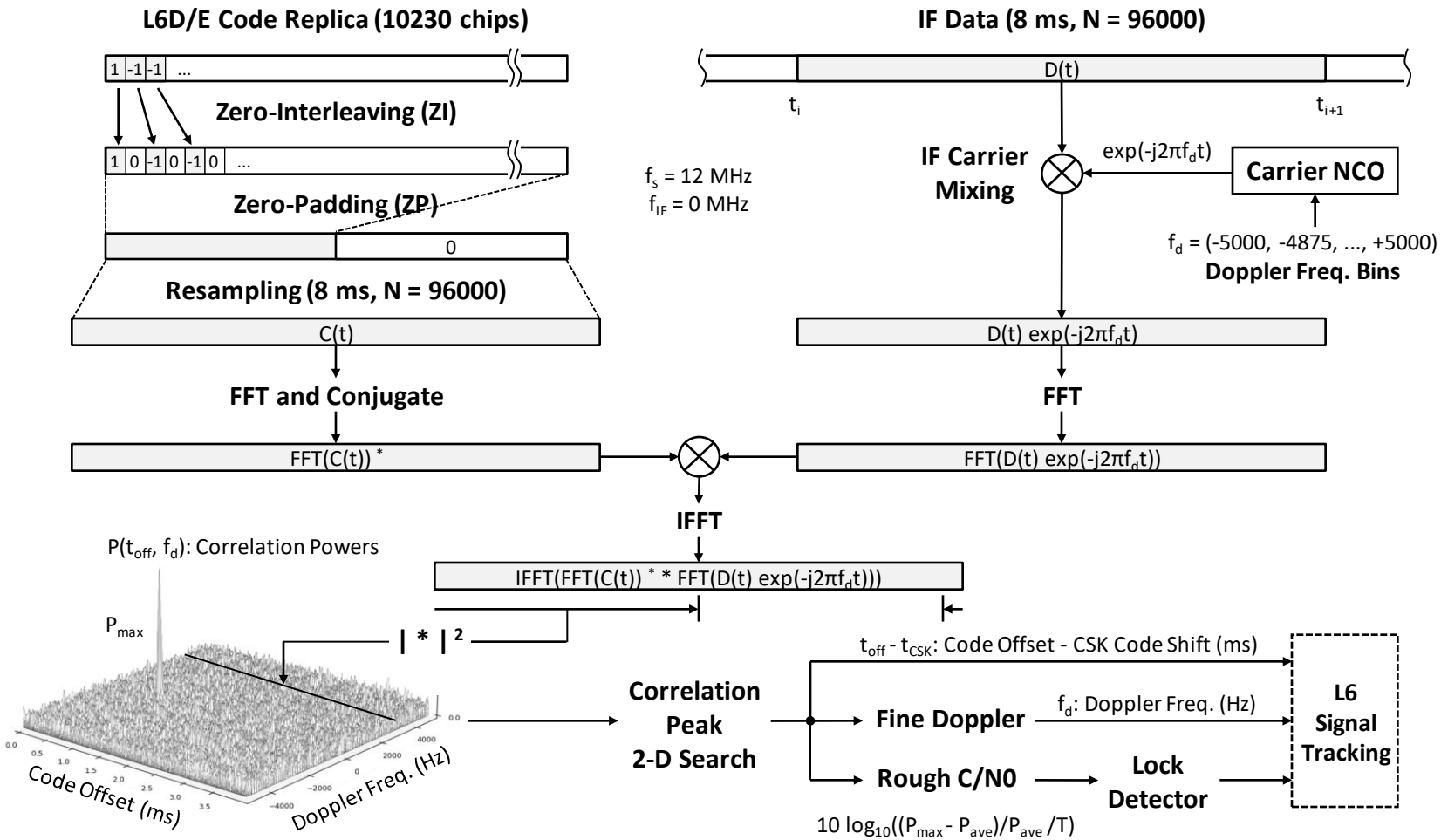

L6 Signal Tracking

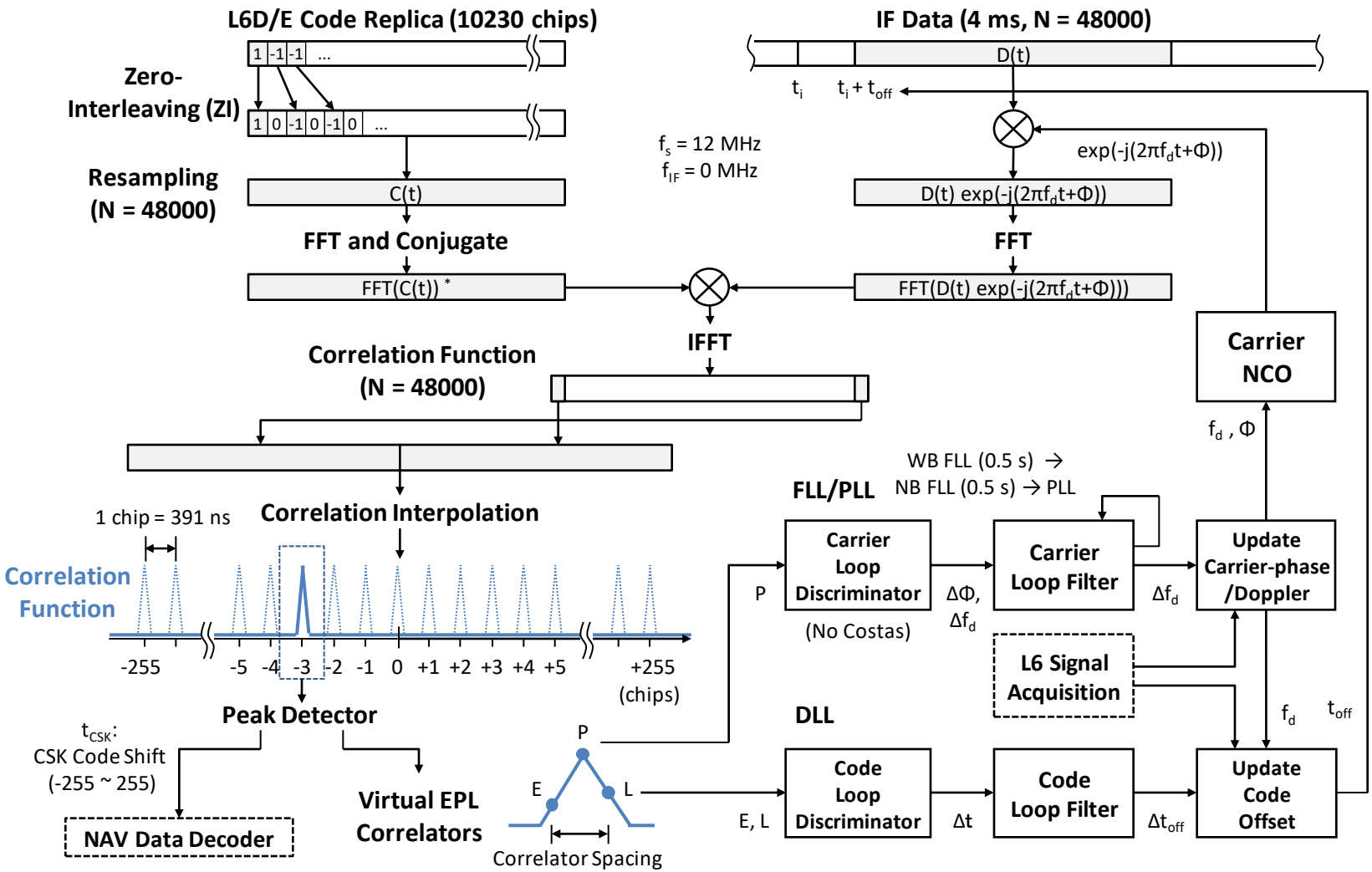

L6 NAV Data Decoder

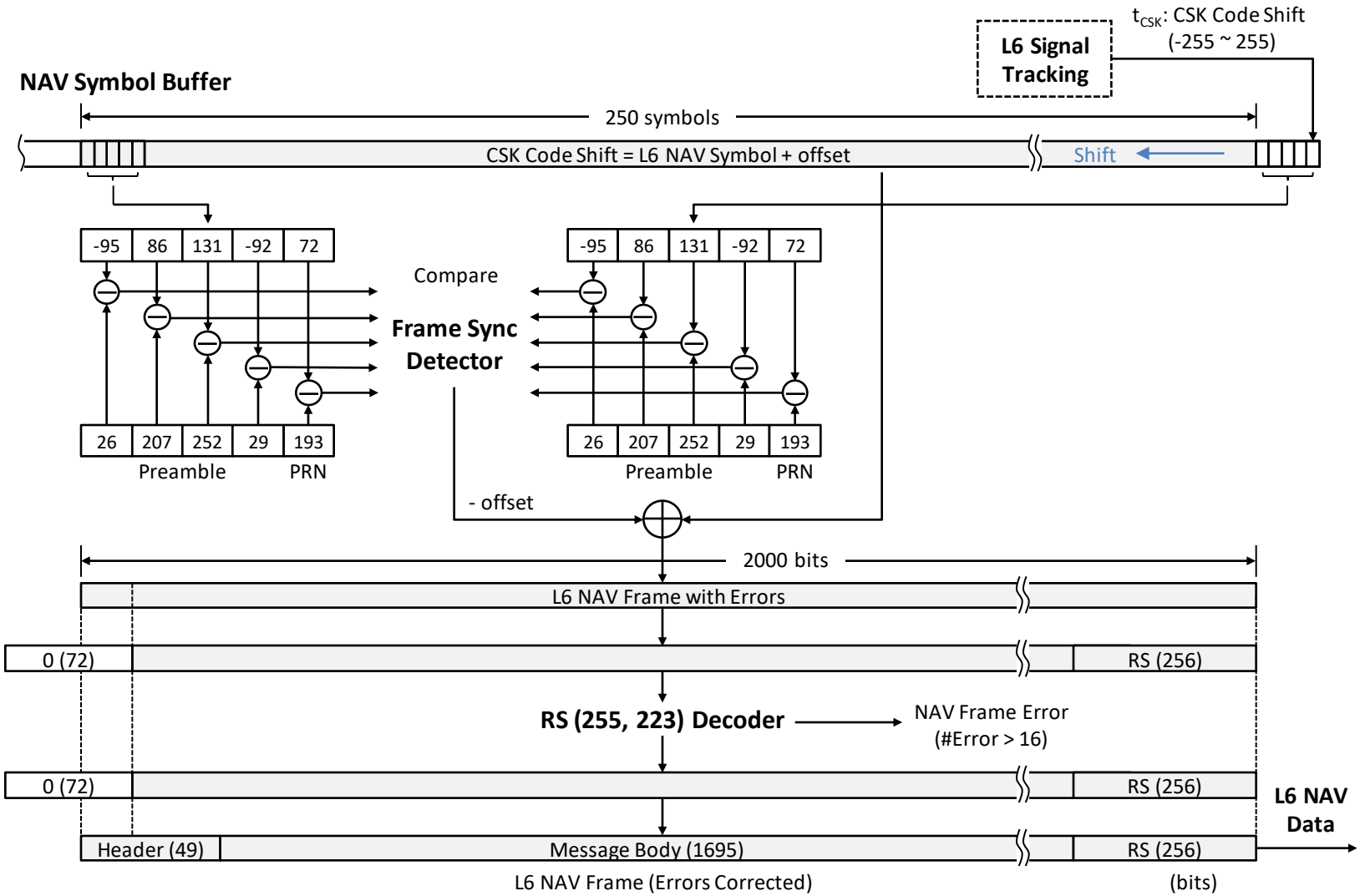

L6 Tracking by pocket_trk

pocket_trk.py (ver.0.7)

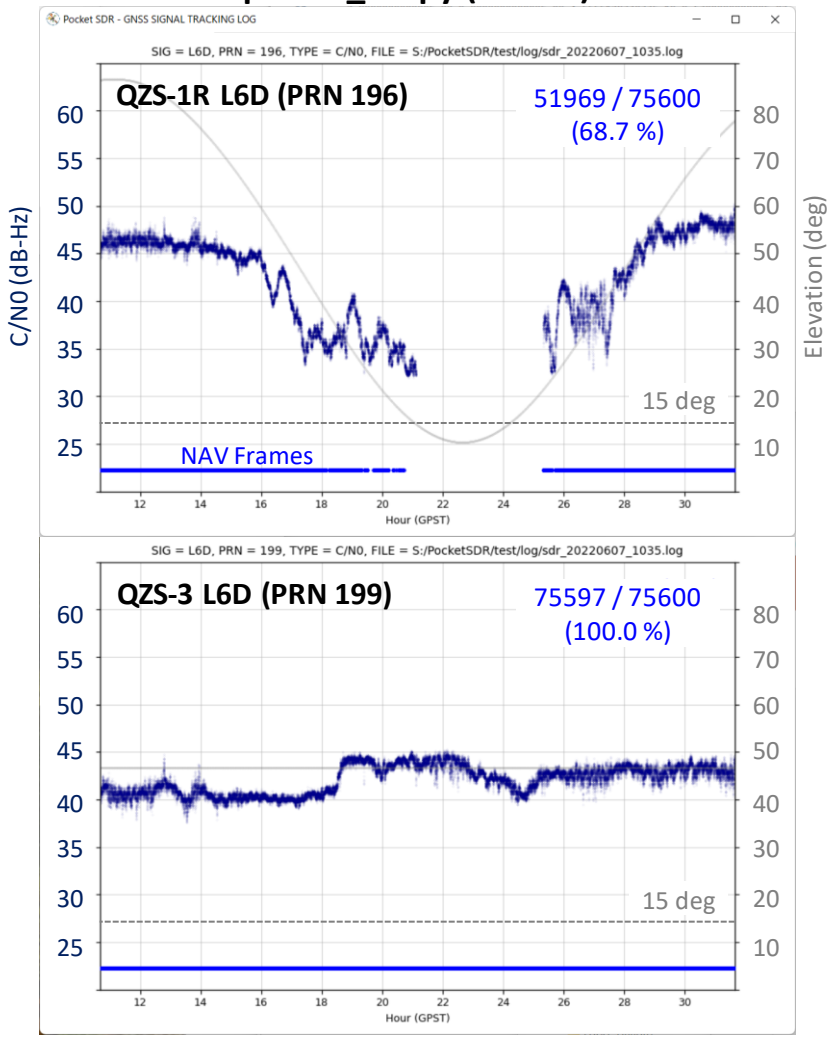

u-blox NEO-D9C

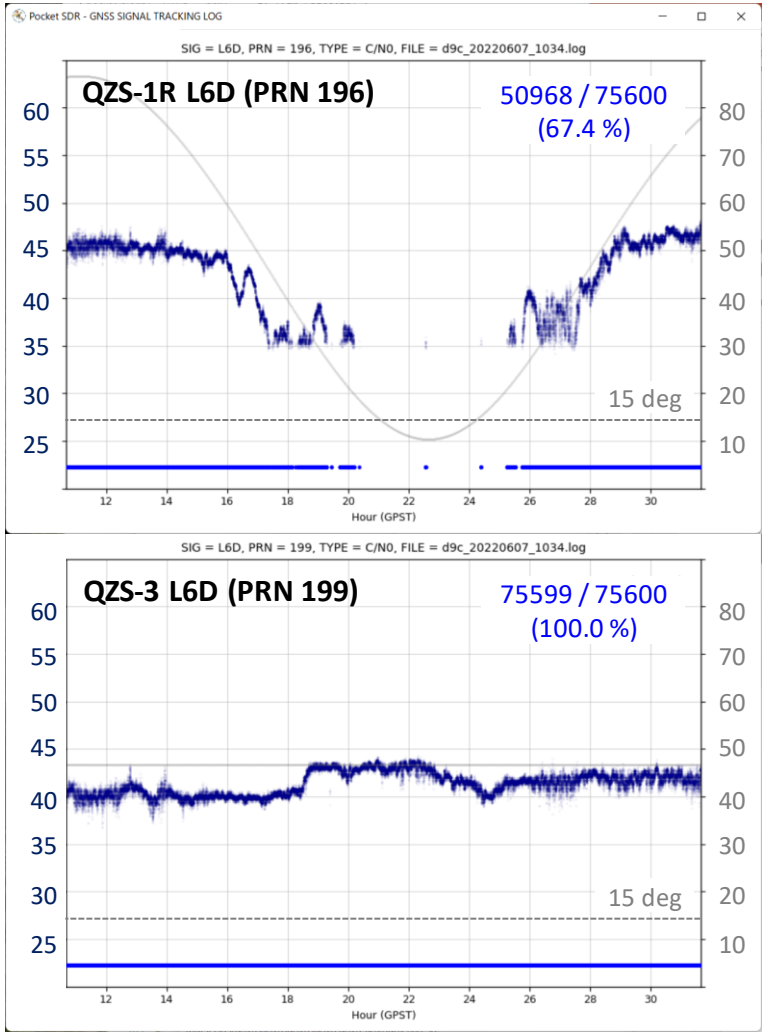

2022-06-07 10:40:00 ~ 2022-06-08 07:39:59 UTC (21 hours)

Snapshot Positioning

Snapshot Positioning

- Recode only DIF data for < 100 ms
- PVT by post-processing
- NAV data provided by external sources
- Very low power consumption by duty-cycling

pocket_snap for snapshot positioning

- pocket_snap.py (ver. 0.7), pocket_snap (ver. 0.9)
- L1 band (1575.42 MHz)
- GPS L1C/A, Galileo E1C, QZSS L1CP, BDS B1CP
- 4 or 6 Msps x I/Q x 2bits x 8 ~ 20 ms DIF
- Input RINEX NAV for Ephemerides

Snapshot Receiver Example

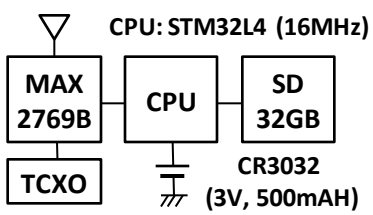

6 Msps x I/Q x 2 bits x 20 ms = 60 kB / snapshot
60 kB x every 1 min x 370 days = 32 GB

Power Budget

MAX2769B	: 20 mA x 25 ms
STM32L4	: 0.5 mA x 105 ms
TCXO	: 1.5 mA x 25 ms
SD-Card	: 30 mA x 80 ms
Subtotal	: 0.0083 mAH / snapshot
Standby	: 0.0002 mAH / H
Total	: 444 mAH / (1440 x 370)

Snapshot Positioning Flow

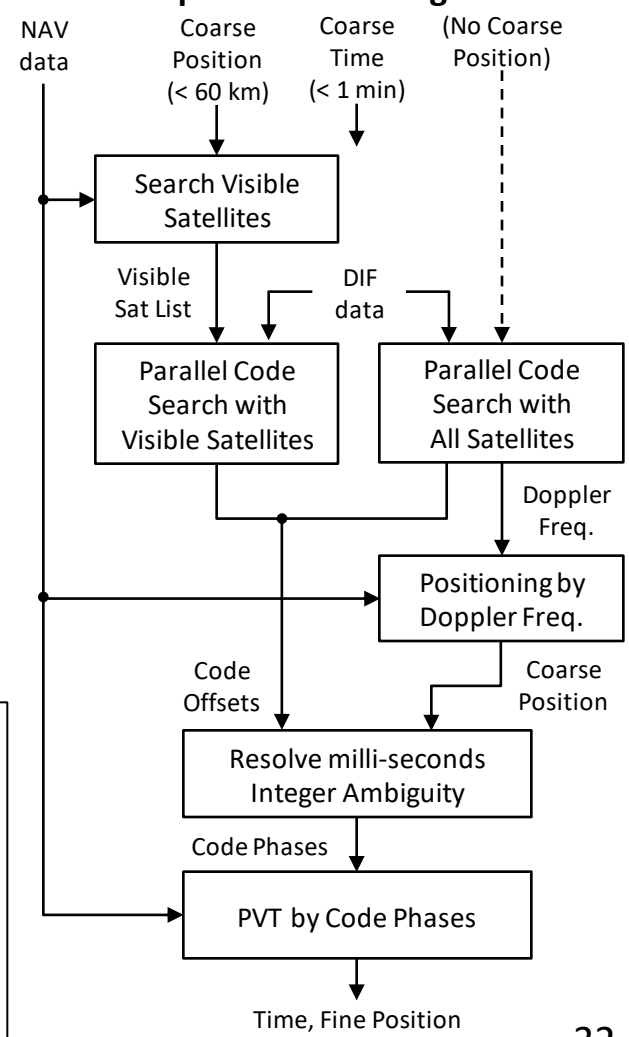

pocket_snap Results

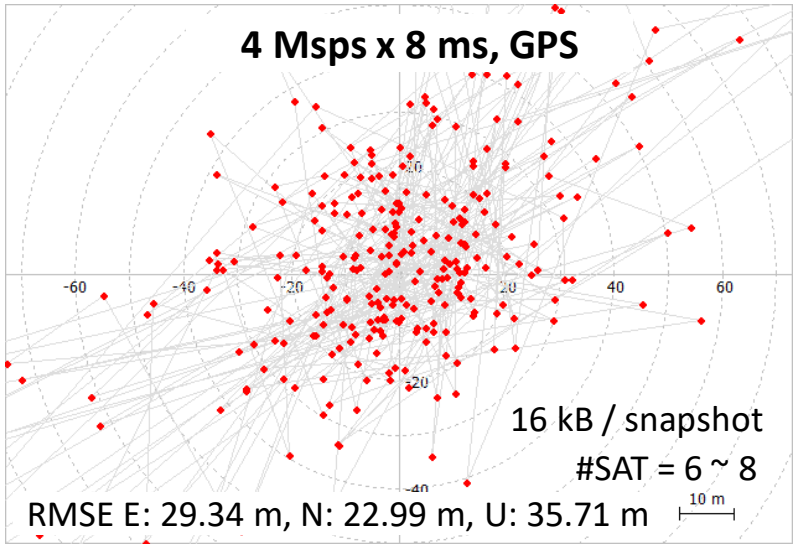

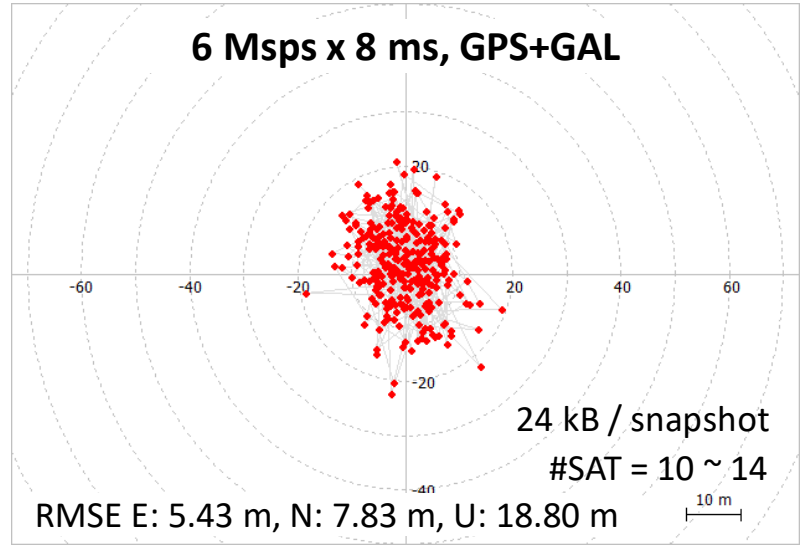

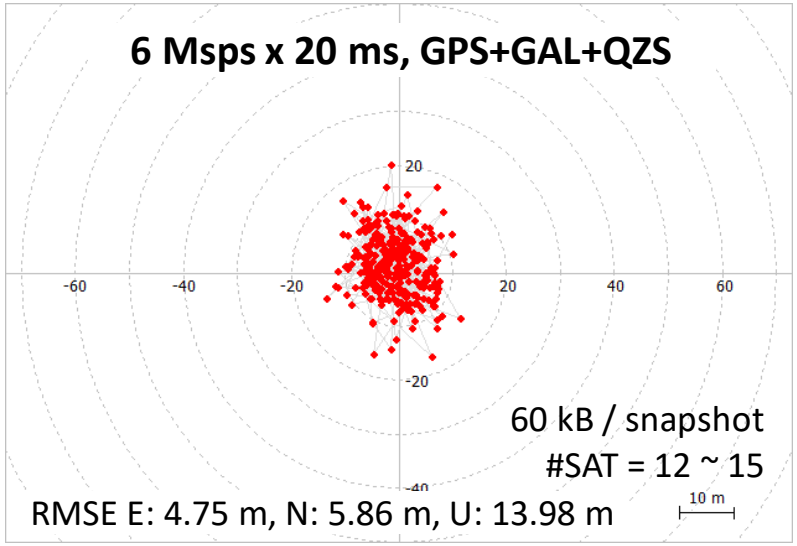

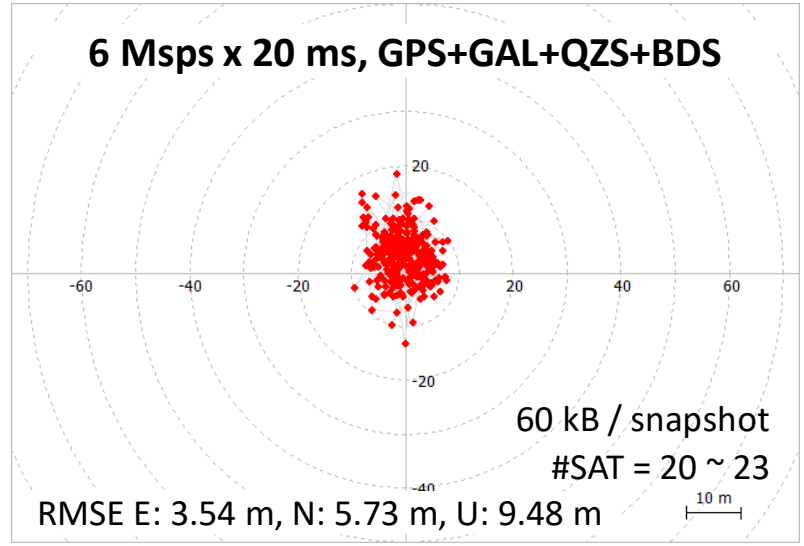

Horizontal Scatter Plots of 300 Snapshots, Post-processed by pocket_snap.py

Spider SDR

14 CH GNSS SDR RF Frontend for Antenna Array

- GNSS L1 Signals: GPS L1C/A, Galileo E1B/C, QZSS L1C/A and BDS B1C
- MAX2769B x 8 + EZ-USB FX2LP (QFP100, 16 bit Slave FIFO) / board
- 8 CH x 10 Msps x I x 2 bits / board
- 14 CH x 10 Msps x I x 2 bits / 2 boards (each 1 CH for board-synchronization)
- Total Parts Cost ~ $400 / 2 boards

For Multipath-rejection, Anti-jamming, Anti-spoofing, ...

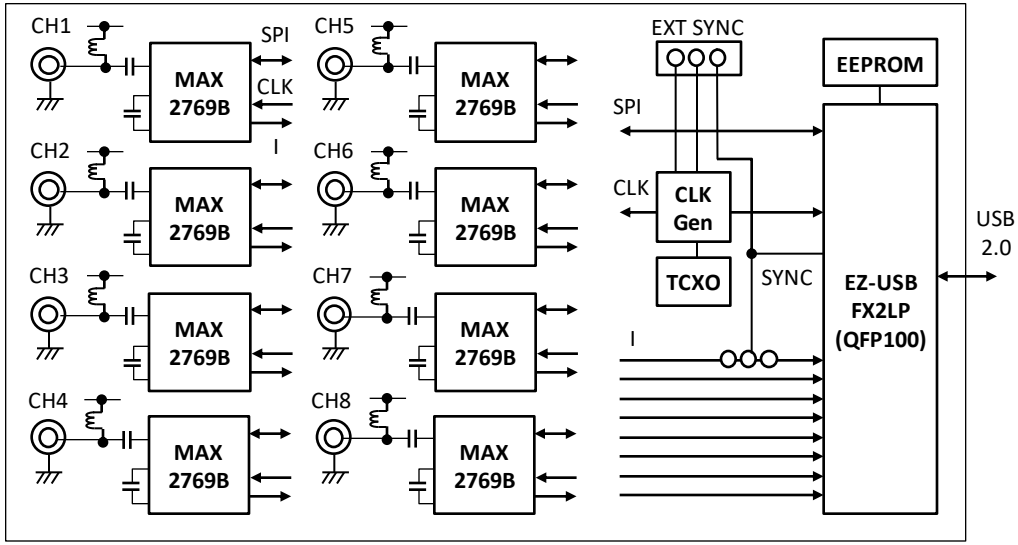

8 CH GNSS SDR RF Frontend Board

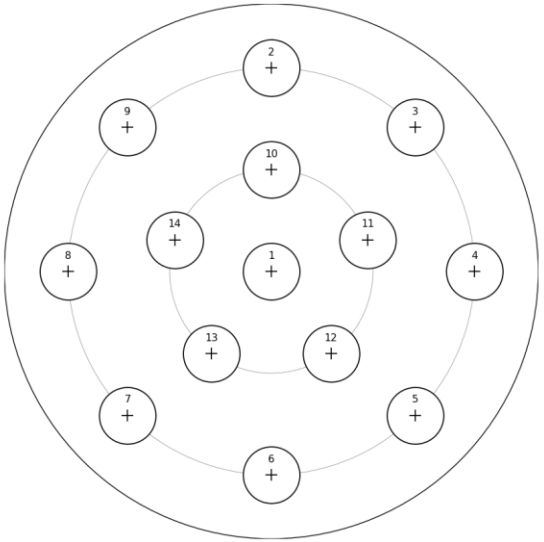

14 Elements Antenna Array

Beam Forming By Antenna Array

Simulation for 14 Elements Antenna Array

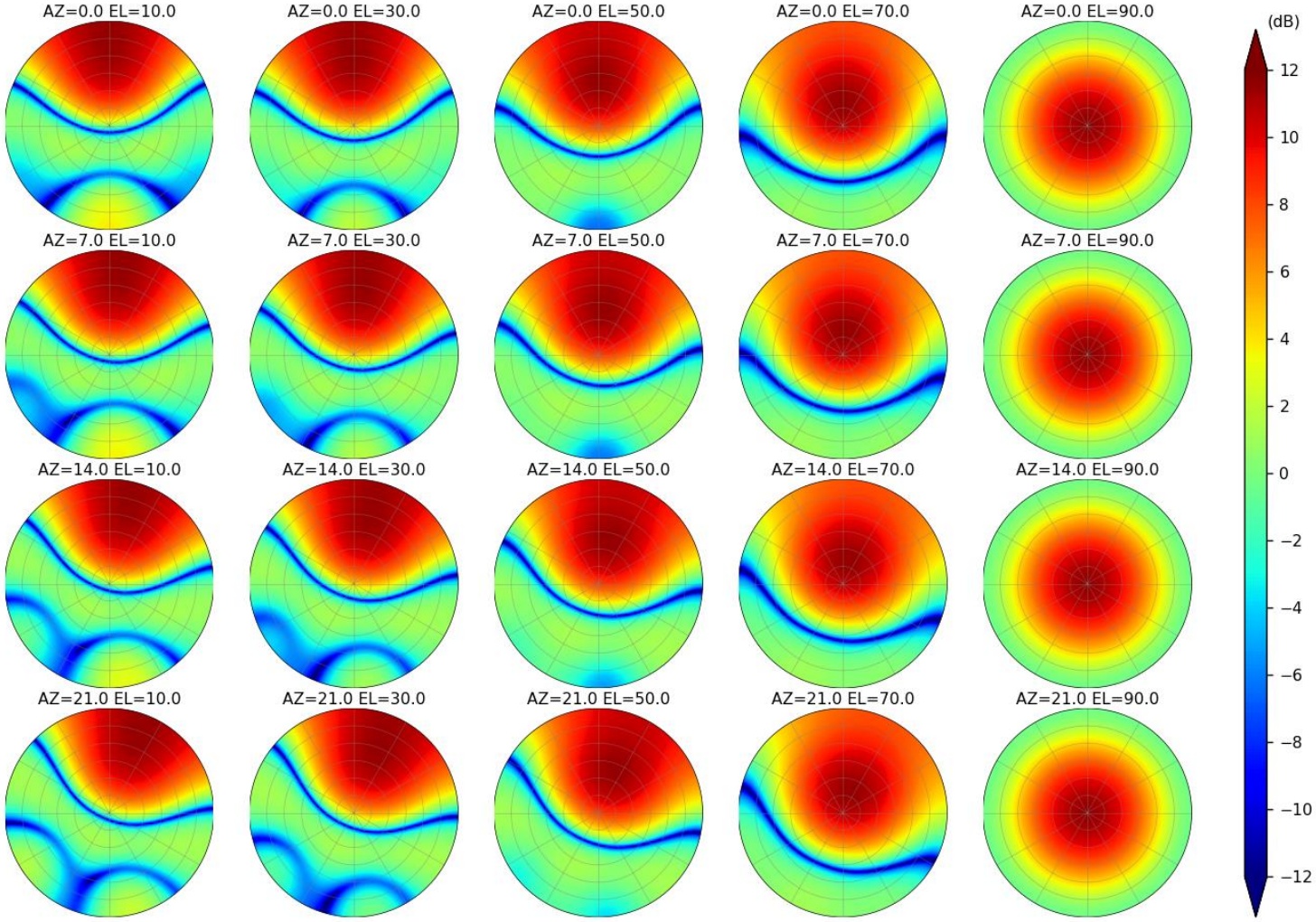
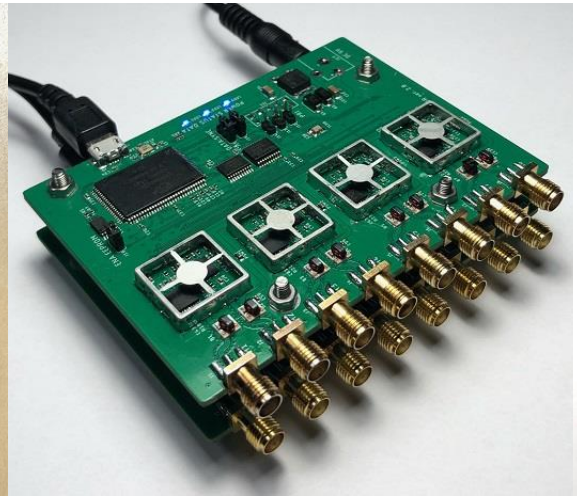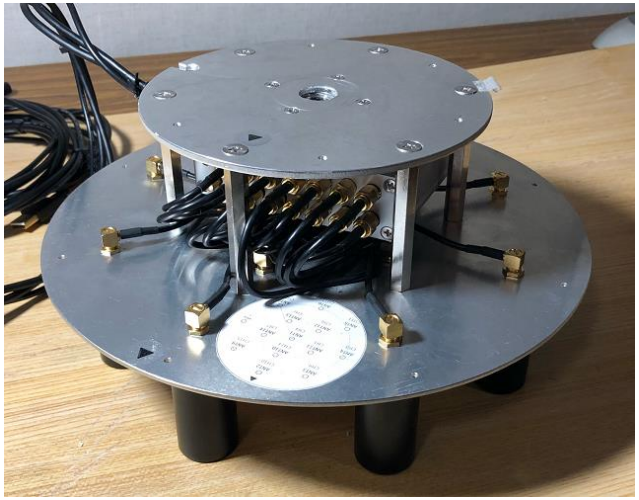
Snapshots of Spider SDR